Henderson County
Code Enforcement Services

240 2nd Avenue East Hendersonville, North Carolina 28792
Phone (828) 697-4857 Fax (828) 697-4658

MEMORANDUM

DATE:	December 20, 2007
TO:	Technical Review Committee
TRC MEETING DATE:	January 2, 2007
REGARDING:	Major Site Plan Review
NAME OF APPLICANT:	Henderson County Public Schools / McKim & Creed / Mosley Architects
DEPARTMENT:	Code Enforcement Services
STAFF CONTACT:	Toby Linville
ATTACHMENTS:	Site Plans

Please find attached plans for the following development proposal to be reviewed by the Henderson County Technical Review Committee on January 2, 2008.

Major Site Plan Review
McKim and Creed agent, on behalf of the owner, Henderson County Public Schools submitted the major site plan for this project. They wish to utilize the property for an elementary school (Hillandale Elementary School) which requires major site plan review per S.R. 5.19.

SR 5.19. ***School (Public/Private/Charter)***

(1) Site Plan. Major *Site Plan* required in accordance with §200A-296 (Major Site Plan Review).
(2) Road Class. This *use* shall be located on a *collector*, *thoroughfare*, *boulevard* and/or *expressway* when located on a property in a *residential zoning district*.
(3) Lighting. *Lighting mitigation* required.
(4) Operations. A *school* shall be permitted *accessory uses* provided the requested *accessory use* is permitted as a *principal*/*accessory use* in the district in which the *school* is located. Additional signage shall not be permitted for the *accessory use.*
(5) Public Address/Loud Speakers. Public address and loud speaker systems shall not be operated before 7:00 a.m. or after 12:00 midnight when on/adjacent to a *residential zoning district*.

The project site is located on approximately 50.24 acres of land (PIN: 9577-61-4242) located at 191 Preston Ln, south of W. Blue Ridge Rd. off of Rocky Branch Rd. The project is not located in a water supply watershed district nor is it located within the floodplain (see Plan). The project is located in the Estate Residential (R-40) zoning district. Public water and public sewer (City of Hendersonville) are proposed. The project meets the requirements of the Land Development Code and all the applicable major site plan requirements are met.

If you would like to submit your changes early please use the comment sheet provided and sending it back via email to tlinville@hendersoncountync.org.

HENDERSON COUNTY PLANNING DEPARTMENT
REVIEW AGENCY RESPONSE FORM

I have reviewed the major site plan for Hillandale Elemenary School and offer the following comments:

_____

_____

_____

_____

_____

_____

_____

_____

_____

_____

_____

_____

_____

_____

(If necessary use back of form or additional sheets for comments)

_____	_____	_____
Reviewed By	Agency	Date

Please Return to:

Toby Linville
tlinville@hendersoncountync.org
828-694-6627

LEGEND

SYMBOL		DETAIL
	PROPOSED SIDEWALK	7/C7.2
	PROPOSED HANDICAP RAMP	6/C7.2
H	PROPOSED HANDICAP SPACE	2/C7.1
HV	PROPOSED HANDICAP VAN SPACE	1&2/C7.1
C	CARPOOL PARKING SPACE	-/-
	PROPOSED HANDICAP SIGN	1&2/C7.1
S	PROPOSED STOP SIGN	-/-
	HEAVY DUTY CONCRETE	5/C7.2
	HEAVY DUTY BITUMINOUS PAVEMENT	4/C7.2
	LIGHT DUTY BITUMINOUS PAVEMENT	3/C7.2
	PROPOSED 2'-0" CURB & GUTTER	9/C7.2
10	PARKING COUNT	-/-
	SPEED HUMP	-/-
	HEAVY DUTY PAVING (N.C.D.O.T.)	4/C7.2

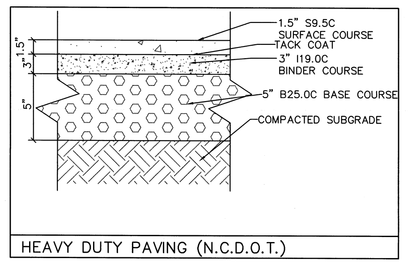

HEAVY DUTY PAVING (N.C.D.O.T.)

PARKING SUMMARY:

PARKING DATA:
ONE SPACES PER EVERY 500 SQ. FT. OF GROSS FLOOR SPACE PER HENDERSON COUNTY LAND USE ORDINANCES

REQUIRED:157 **PROVIDED:157** **HANDICAP: 6**
COMPACT: N/A **CARPOOL: 10** **LOADING SPACES: N/A**
TOTAL VEHICULAR PARKING PROVIDED:157

SETBACK:

PROJECT MEETS ALL REQUIRED SETBACKS.
FRONT SETBACK = 60 FT
SIDE & REAR SETBACK = 35 FT

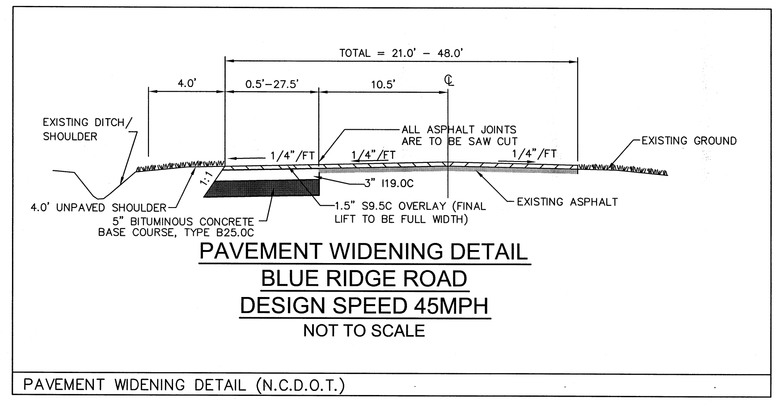

PAVEMENT WIDENING DETAIL
BLUE RIDGE ROAD
DESIGN SPEED 45MPH
NOT TO SCALE

PAVEMENT WIDENING DETAIL (N.C.D.O.T.)

NOTE:
ALL RADII ARE 5'-0" UNLESS OTHERWISE NOTED

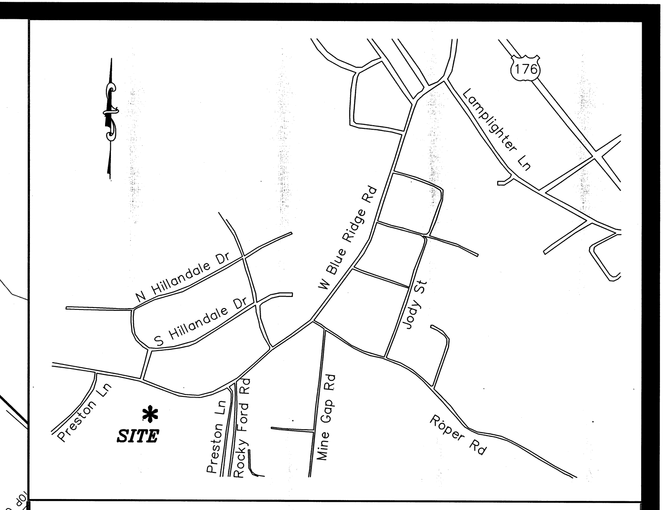

VICINITY MAP SCALE: N.T.S.

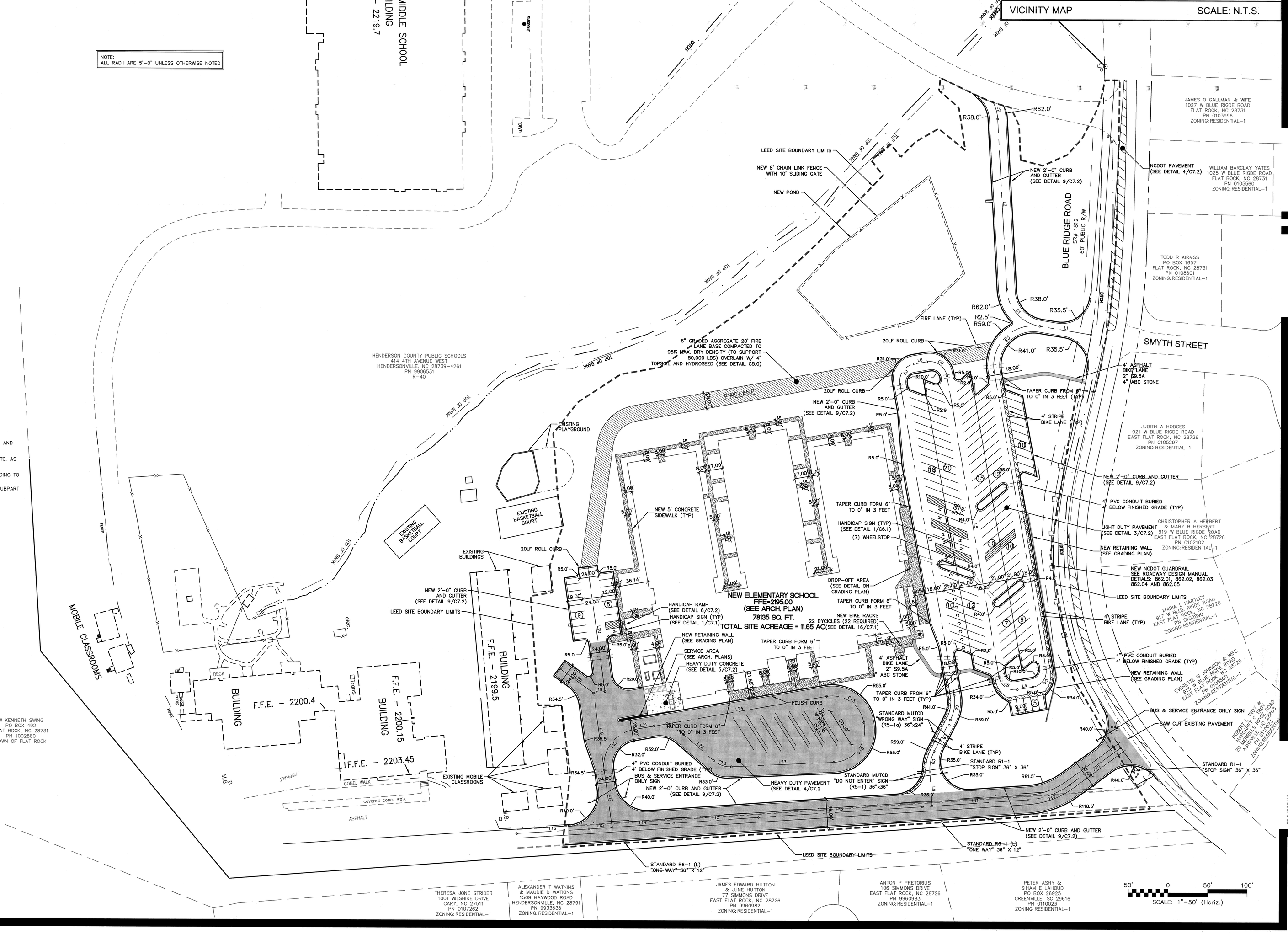

LINE TABLE		
LINE	LENGTH	BEARING
L1	65.71'	S 19°20'05" W
L2	216.97'	N 83°34'15" W
L3	382.63'	N 90°00'00" E
L4	20.00'	S 00°00'00" E
L5	387.80'	S 90°00'00" W
L6	16.00'	S 00°00'00" E
L7	401.17'	N 90°00'00" E
L8	45.00'	S 53°10'34" E
L9	43.60'	S 84°00'51" E
L10	80.04'	S 26°19'25" E
L11	134.15'	S 05°59'09" W
L12	207.68'	S 06°04'58" W
L13	107.62'	S 05°52'51" W
L14	77.97'	S 05°55'36" W
L15	29.51'	S 05°55'36" W
L16	91.55'	S 06°13'51" W
L17	73.38'	N 88°04'24" W
L18	98.76'	N 88°04'24" W
L19	14.49'	N 01°55'36" E
L20	158.58'	N 88°04'24" W
L21	24.87'	N 00°00'00" W
L22	50.96'	N 50°36'51" E
L23	129.66'	N 07°19'21" E
L24	222.28'	S 00°00'00" E
L25	52.37'	S 45°55'36" W

CURVE TABLE					
CURVE	RADIUS	LENGTH	CHORD BEARING	CHORD	DELTA
C1	50.00'	67.71'	N 58°07'57" E	62.66'	77°35'41"
C2	50.00'	22.13'	S 84°14'59" W	21.95'	25°21'33"
C3	50.00'	95.41'	S 35°19'58" E	81.58'	109°20'05"
C4	20.00'	31.42'	N 45°00'00" W	28.28'	90°00'00"
C5	20.00'	31.42'	N 45°00'00" E	28.28'	90°00'00"
C6	22.00'	34.56'	S 45°00'00" W	31.11'	90°00'00"
C7	22.00'	34.56'	S 45°00'00" E	31.11'	90°00'00"
C8	50.00'	32.13'	N 71°35'17" W	31.58'	36°49'26"
C9	50.00'	26.91'	S 68°35'42" E	26.59'	30°50'17"
C10	100.00'	56.39'	N 10°10'08" W	55.65'	32°18'34"
C11	46.00'	70.71'	S 44°37'17" E	63.95'	88°04'24"
C12	46.00'	40.64'	S 25°18'26" W	39.33'	50°36'51"
C13	32.00'	24.18'	N 28°58'06" E	23.61'	43°17'31"
C14	41.00'	72.37'	N 43°14'43" W	63.33'	101°08'06"
C15	41.00'	64.17'	S 44°50'08" W	57.82'	89°40'16"

McKIM&CREED
8020 Tower Point Drive
Charlotte, North Carolina 28227
Phone: (704)841-2588, Fax: (704)841-2567
AA0002667 EB0006691
www.mckimcreed.com

CALL N.C. ONE CALL CENTER BEFORE YOU DIG
STOP
1-800-632-4949
AVOID UTILITY DAMAGE

CONTRACTOR IS FULLY RESPONSIBLE FOR CONTACTING APPROPRIATE PARTIES AND ASSURING THAT EXISTING UTILITIES ARE LOCATED PRIOR TO CONSTRUCTION.

CONTRACTOR IS RESPONSIBLE FOR PLACING BARRICADES USING FLAG MEN, ETC. AS NECESSARY TO INSURE SAFETY TO THE PUBLIC.

ALL PAVEMENT CUTS, CONCRETE OR ASPHALT, ARE TO BE REPLACED ACCORDING TO STANDARDS OF THE NORTH CAROLINA DEPARTMENT OF TRANSPORTATION

SHORING WILL BE ACCORDING TO OSHA TRENCHING STANDARDS PART 1926 SUBPART P, OR AS AMENDED.

ALL RADII 5'-0" UNLESS OTHERWISE NOTED.

MOSELEYARCHITECTS
A PROFESSIONAL CORPORATION
11430 NORTH COMMUNITY HOUSE ROAD, GIBSON BUILDING SUITE 225, CHARLOTTE, NC 28277
PHONE (704) 540-3755 FAX (704) 540-3754
MOSELEYARCHITECTS.COM

HILLANDALE ELEMENTARY SCHOOL SITE PLAN

HENDERSON COUNTY PUBLIC SCHOOLS
HENDERSON COUNTY, NORTH CAROLINA

PROJECT NO: MOSELEY: M6C-409-006
DATE: 12/10/07
REVISIONS:
DRAWN BY:
BUILDING PERMIT SET

C2.0

HILLANDALE ELEMENTARY SCHOOL
GRADING & DRAINAGE PLAN
HENDERSON COUNTY PUBLIC SCHOOLS
HENDERSON COUNTY, NORTH CAROLINA

C4.0

PROJECT NO: MOSELEY M&K:4099-0006
DATE: 12/10/07
REVISIONS: -
DRAWN BY:
BUILDING PERMIT SET

MOSELEYARCHITECTS
A PROFESSIONAL CORPORATION
11430 NORTH COMMUNITY HOUSE ROAD, GIBSON BUILDING SUITE 225, CHARLOTTE, NC 28277
PHONE (704) 540-3755 FAX (704) 540-3754
MOSELEYARCHITECTS.COM

NORTH CAROLINA PROFESSIONAL SEAL 23528 ENGINEER BRIAN J. DEY 12/9/07

McKIM & CREED
8020 Tower Point Drive
Charlotte, North Carolina 28227
Phone: (704)841-2588, Fax: (704)841-2567
AA0028667 EB0006691
www.mckimcreed.com

SCALE: 1"=50'

SCALE: N.T.S.

VICINITY MAP

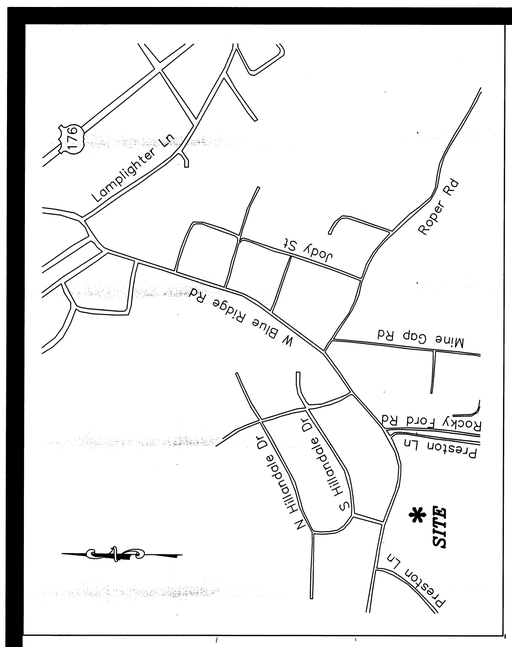

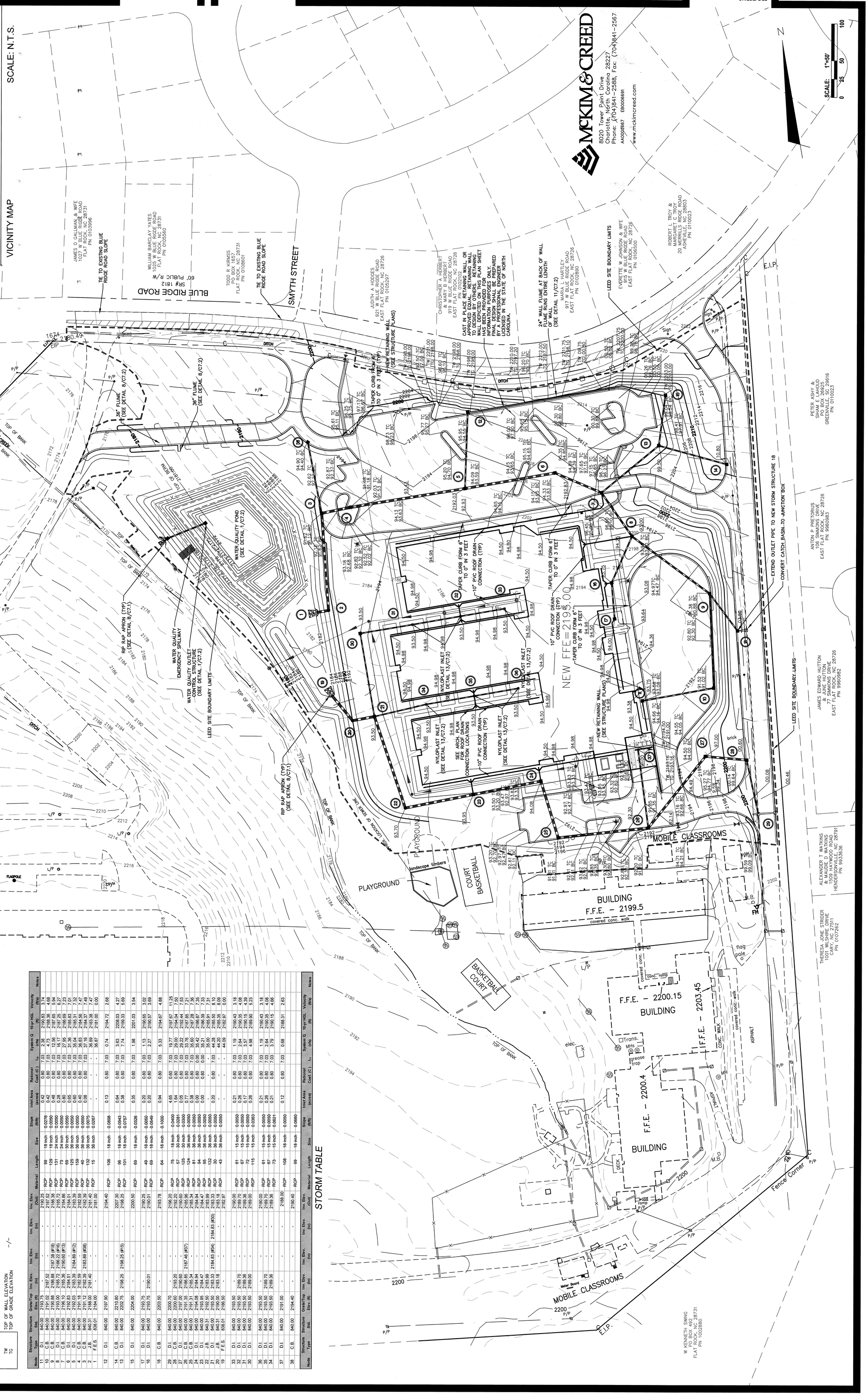

LEGEND

SYMBOL	DETAIL
PROPOSED CONTOUR	-/-
PROPOSED INDEX CONTOUR	-/-
EXISTING CONTOUR	-/-
EXISTING INDEX CONTOUR	-/-
PROPOSED SPOT ELEVATION	-/-
PROPOSED HIGH POINT	-/-
PROPOSED DRAINAGE SWALE	-/-
PROPOSED STORM DRAINAGE	-/-
TW TOP OF WALL ELEVATION TG TOP OF GRADE ELEVATION	-/-
C.O. PROPOSED ROOF DRAIN LINE W/ CLEAN-OUT	-/-
CB PROPOSED CATCH BASIN	1/C7.0
DI PROPOSED DROP INLET	9/C7.0
MH PROPOSED MANHOLE	-/-
PROPOSED GRAVEL AND RIPRAP APRON	7/C7.0

STORM TABLE

Node	Structure Type	Structure Std.	Grate/Top Elev. (ft)	Inv. Elev. (in)	Inv. Elev. (in)	Inv. Elev. (out)	Inv. Elev. (out)	Material	Length	Size	Slope (ft/ft)	Inlet Area (acres)	Rational Coef. (C)	System Q (cfs)	10-yr HGL (ft)	Velocity (ft/s)	Notes
11	D.I.	840.00	2193.75	-	-	2190.25	-	RCP	99	18 inch	0.0278	0.42	0.80	7.03	2.38	2190.83	3.74
10	C.B.	840.00	2191.02	2187.52	-	2187.52	-	RCP	129	18 inch	0.0050	0.42	0.80	7.03	4.73	2188.36	4.68
9	C.B.	840.00	2190.88	2188.85	-	2188.85	-	RCP	131	24 inch	0.0050	0.48	0.80	7.03	12.56	2187.65	5.94
8	D.I.	840.00	2193.20	2187.72 (#16)	-	2187.72 (#16)	-	RCP	73	24 inch	0.0050	0.28	0.80	7.03	16.17	2187.25	6.27
7	C.B.	840.00	2196.10	2185.36	-	2190.60 (#13)	-	RCP	69	30 inch	0.0050	0.65	0.80	7.03	31.36	2186.89	7.03
6	D.I.	840.00	2192.83	2184.51	-	2184.01	-	RCP	125	36 inch	0.0050	0.60	0.80	7.03	35.04	2185.31	7.01
5	D.I.	840.00	2192.03	2183.39	-	2183.39	-	RCP	159	36 inch	0.0050	0.40	0.80	7.03	36.83	2184.56	7.32
4	C.B.	840.00	2191.18	2182.59	-	2182.59	-	RCP	40	36 inch	0.0050	0.08	0.80	7.03	37.16	2184.37	7.47
3	C.B.	840.00	2191.12	2182.39	-	2182.39	-	RCP	122	36 inch	0.0075	-	-	-	36.89	2183.38	7.47
2	J.B.	840.31	2188.00	2181.40	-	2181.40	-	RCP	15	36 inch	0.0267	-	-	-	36.87	2181.00	0.00
1	F.E.S.	838.01	2194.00	-	-	2181.00	-										
12	D.I.	840.00	2197.90	-	-	2194.40	-	RCP	106	18 inch	0.0898	0.13	0.80	7.03	0.74	2194.72	2.68
14	C.B.	840.00	2210.80	-	-	2207.30	-	RCP	96	18 inch	0.0943	0.64	0.80	7.03	3.63	2208.03	4.27
13	D.I.	840.00	2202.75	2198.25 (#15)	-	2198.25	-	RCP	101	18 inch	0.0757	0.38	0.80	7.03	7.74	2199.33	5.69
15	D.I.	840.00	2204.00	-	-	2200.50	-	RCP	69	18 inch	0.0326	0.35	0.80	7.03	1.98	2201.03	3.54
17	D.I.	840.00	2193.75	-	-	2190.25	-	RCP	49	18 inch	0.0050	0.20	0.80	7.03	1.13	2190.65	3.02
16	D.I.	840.00	2193.75	2190.01	-	2190.01	-	RCP	69	18 inch	0.0549	0.20	0.80	7.03	2.27	2190.57	3.69
18	C.B.	840.00	2203.50	-	-	2193.78	-	RCP	64	18 inch	0.1000	0.94	0.80	7.03	5.33	2194.67	4.88
29	D.I.	840.00	2200.70	-	-	2196.20	-	RCP	75	18 inch	0.0400	4.65	0.60	7.03	19.77	2197.67	11.25
28	C.B.	840.00	2200.60	2193.20	-	2192.20	-	RCP	57	30 inch	0.0281	1.64	0.80	7.03	29.00	2194.04	7.50
27	D.I.	840.00	2197.00	2190.60	-	2190.60	-	RCP	125	30 inch	0.0360	0.05	0.80	7.03	29.22	2192.44	7.53
26	C.B.	840.00	2191.35	2186.85	2187.46 (#37)	2185.96	-	RCP	124	36 inch	0.0050	0.77	0.80	7.03	33.76	2187.85	7.21
25	C.B.	840.00	2191.31	2185.34	-	2185.34	-	RCP	81	36 inch	0.0050	0.38	0.80	7.03	35.60	2187.28	7.36
24	D.I.	840.00	2194.08	2184.94	-	2184.94	-	RCP	94	36 inch	0.0050	0.00	0.80	0.00	35.42	2186.87	7.35
23	D.I.	840.00	2193.95	2184.47	-	2184.47	-	RCP	95	36 inch	0.0050	0.00	0.80	0.00	35.21	2186.39	7.33
22	D.I.	840.00	2192.50	2183.99	-	2183.99	-	RCP	132	36 inch	0.0050	-	-	-	35.00	2185.91	7.31
21	D.I.	840.00	2193.50	2183.33	2184.83 (#30)	2184.83	-	RCP	30	36 inch	0.0050	0.20	0.80	7.03	44.28	2185.50	8.10
20	J.B.	840.31	2190.00	2183.18	-	2183.18	-	RCP	43	36 inch	0.0050	-	-	-	44.20	2185.39	8.09
19	F.E.S.	838.01	2186.50	-	-	2182.97	-					-	-	-	44.09	2182.97	0.00
33	D.I.	840.00	2193.50	-	-	2190.00	-	RCP	61	15 inch	0.0050	0.21	0.80	7.03	1.19	2190.43	3.18
32	D.I.	840.00	2193.50	2189.70	-	2189.70	-	RCP	67	15 inch	0.0050	0.26	0.80	7.03	2.64	2190.35	4.08
31	D.I.	840.00	2193.50	2189.36	-	2189.36	-	RCP	72	15 inch	0.0050	0.17	0.80	7.03	3.57	2190.15	4.39
30	D.I.	840.00	2193.50	2189.00	-	2189.00	-	RCP	115	15 inch	0.0363	0.26	0.80	7.03	4.98	2189.90	5.23
36	D.I.	840.00	2193.50	-	-	2190.00	-	RCP	61	15 inch	0.0050	0.21	0.80	7.03	1.19	2190.43	3.18
35	D.I.	840.00	2193.50	2189.70	-	2189.70	-	RCP	67	15 inch	0.0050	0.26	0.80	7.03	2.64	2190.35	4.08
34	D.I.	840.00	2193.50	2189.36	-	2189.36	-	RCP	73	15 inch	0.0621	0.21	0.80	7.03	3.79	2190.15	4.66
37	D.I.	840.00	2191.00	-	-	2188.00	-	RCP	108	18 inch	0.0050	0.12	0.80	7.03	0.68	2188.31	2.63
38	C.B.	840.00	2194.40	-	-	2190.40	-	RCP	99	18 inch	0.0660						

LEGEND

SYMBOL		DETAIL
W W	EXISTING WATER MAIN	–/–
SS	EXISTING SAN. SWR. LINE AND MANHOLE	–/–
	NEW WATER LINE	–/–
	NEW METER AND AND BACKFLOW PREVENTION DEVICES	12/C7.2
	NEW SANITARY SEWER LINE/LATERAL	–/–
SSMH	NEW SANITARY SEWER MANHOLE	–/–
CO	NEW CLEANOUT	10/C7.2

CALL N.C. ONE CALL CENTER BEFORE YOU DIG
STOP
1-800-632-4949
AVOID UTILITY DAMAGE

1. CONTRACTOR IS FULLY RESPONSIBLE FOR CONTACTING APPROPRIATE PARTIES AND ASSURING THAT EXISTING UTILITIES ARE LOCATED PRIOR TO CONSTRUCTION.
2. CONTRACTOR IS RESPONSIBLE FOR PLACING BARRICADES USING FLAG MEN, ETC. AS NECESSARY TO INSURE SAFETY TO THE PUBLIC.
3. ALL PAVEMENT CUTS, CONCRETE OR ASPHALT, ARE TO BE REPLACED ACCORDING TO STANDARDS OF THE NORTH CAROLINA DEPARTMENT OF TRANSPORTATION
4. SHORING WILL BE ACCORDING TO OSHA TRENCHING STANDARDS PART 1926 SUBPART P, OR AS AMENDED.

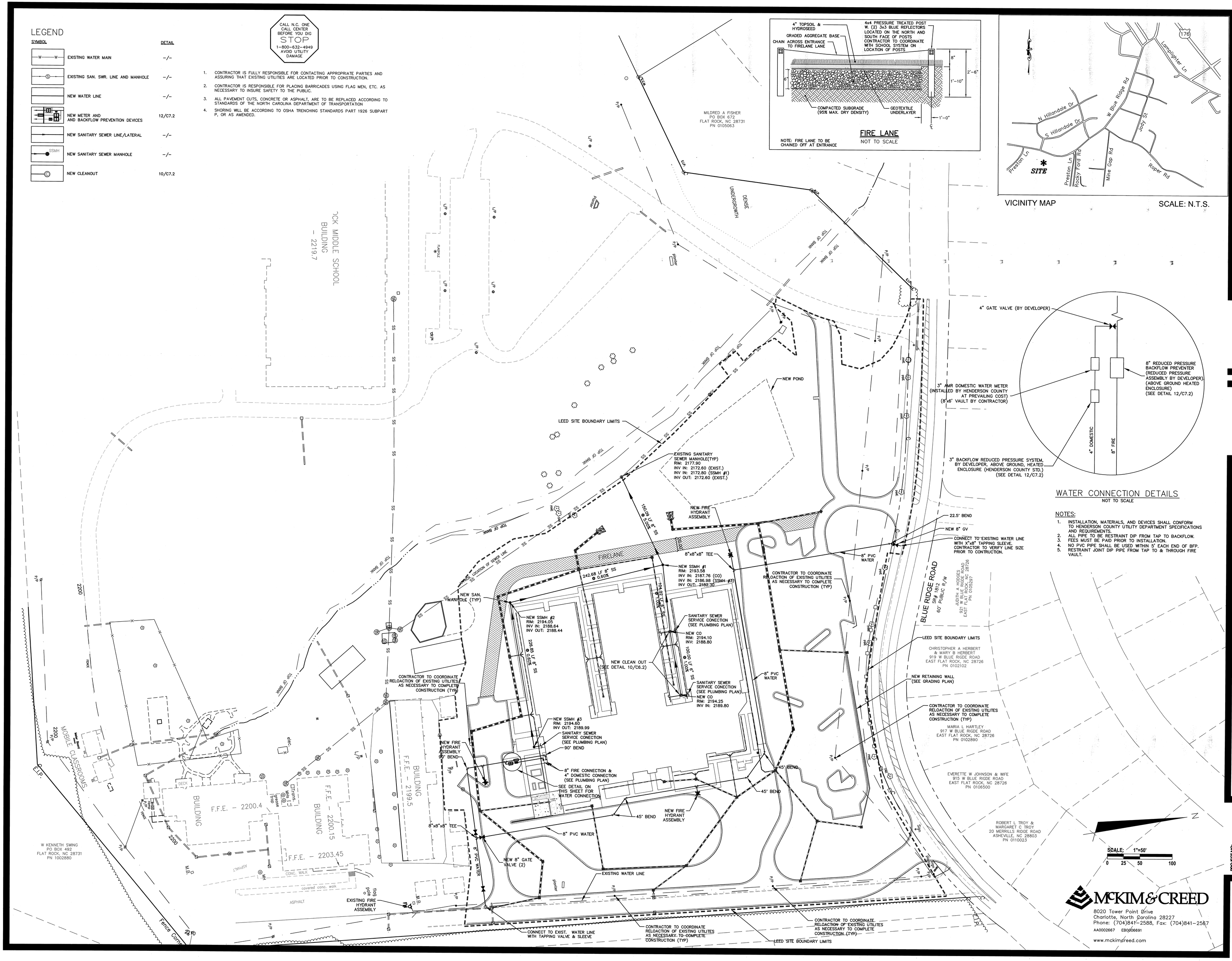

MOSELEYARCHITECTS
A PROFESSIONAL CORPORATION
11430 NORTH COMMUNITY HOUSE ROAD, GIBSON BUILDING SUITE 225, CHARLOTTE, NC 28277
PHONE (704) 540-3755 FAX (704) 540-3754
MOSELEYARCHITECTS.COM

HILLANDALE ELEMENTARY SCHOOL
UTILITY PLAN

HENDERSON COUNTY PUBLIC SCHOOLS
HENDERSON COUNTY, NORTH CAROLINA

PROJECT NO: MOSELEY MAC-409-0005
DATE: 12/10/07
REVISIONS:
DRAWN BY:
BUILDING PERMIT SET

McKIM&CREED
8020 Tower Point Drive
Charlotte, North Carolina 28227
Phone: (704)841-2588, Fax: (704)841-2587
AA0002667 EB0006691
www.mckimcreed.com

C5.0

PLANTING SCHEDULE

SYM	#	COMMON NAME	BOTANICAL NAME	SIZE	ROOT SPAC'G	NOTES
CANOPY TREES						
HM	33	HEDGE MAPLE	ACER CAMPESTRE			
GROUNDCOVER AND VINES						
SOD	202,000 SF		FESCUE (FESTUCA)	S.F.		

CALL N.C. ONE CALL CENTER BEFORE YOU DIG
STOP
1-800-632-4949
AVOID UTILITY DAMAGE

1. CONTRACTOR IS FULLY RESPONSIBLE FOR CONTACTING APPROPRIATE PARTIES AND ASSURING THAT EXISTING UTILITIES ARE LOCATED PRIOR TO CONSTRUCTION.
2. CONTRACTOR IS RESPONSIBLE FOR PLACING BARRICADES USING FLAG MEN, ETC. AS NECESSARY TO INSURE SAFETY TO THE PUBLIC.
3. ALL PAVEMENT CUTS, CONCRETE OR ASPHALT, ARE TO BE REPLACED ACCORDING TO STANDARDS OF THE NORTH CAROLINA DEPARTMENT OF TRANSPORTATION
4. SHORING WILL BE ACCORDING TO OSHA TRENCHING STANDARDS PART 1926 SUBPART P, OR AS AMENDED.

LEGEND (LANDSCAPE PLAN)

SYMBOL		DETAIL
	HYDRO SEEDING	-/-
	HEDGE MAPLE	-/-

McKIM&CREED
8020 Tower Point Drive
Charlotte, North Carolina 28227
Phone: (704)841-2588, Fax: (704)841-2567
AA0002667 EB0006691
www.mckimcreed.com

MOSELEY ARCHITECTS
A PROFESSIONAL CORPORATION
11430 NORTH COMMUNITY HOUSE ROAD, GIBSON BUILDING SUITE 225, CHARLOTTE, NC 28277
PHONE (704) 540-3755 FAX (704) 540-3754
MOSELEYARCHITECTS.COM

NORTH CAROLINA PROFESSIONAL SEAL 025,793 ENGINEER BRIAN J. MOSELEY

HILLANDALE ELEMENTARY SCHOOL
PLANTING PLAN

HENDERSON COUNTY PUBLIC SCHOOLS
HENDERSON COUNTY, NORTH CAROLINA

PROJECT NO: MOSELEY M&C-4099-0006
DATE: 12/10/07
REVISIONS:
DRAWN BY:
BUILDING PERMIT SET

C6.0

NOTES:

1. BIKE RACKS SHOULD BE INSTALLED AS PER MANUFACTURER'S RECOMMENDED INSTALLATION PROCEDURES.
2. ALTERNATIVE BIKE RACKS OR LOCKERS MAY BE USED BUT ARE SUBJECT TO APPROVAL BY THE ENGINEER.
3. ALL DIMENSIONS SHOWN ARE MINIMUM.

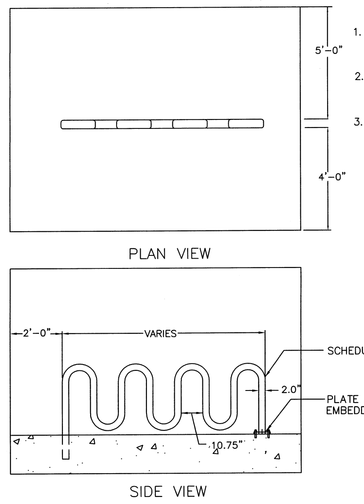

WAVE RACK FOR BICYCLE PARKING

SCALE: NTS — 16 / C-7.1

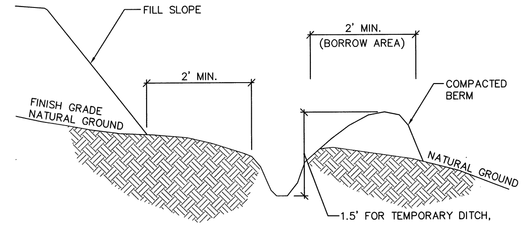

NOTE:

1. DITCH SHOULD HAVE LONGITUDINAL SLOPE OF 1.0%
2. SILT FENCE MAY BE REQUIRED BEHIND BERM.

TEMPORARY SILT DITCH

SCALE: NTS — 12 / C-7.1

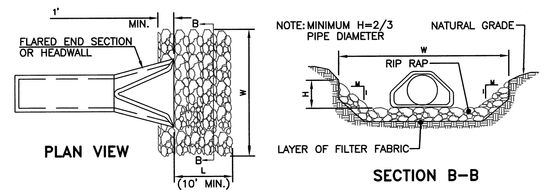

STRUCTURE/PIPE				APRON			
STRUCTURE FES I.D.#:	DIA (ft)	PIPE SLOPE(%)	VEL. (ft/s)	RIPRAP CLASS	LENGTH (ft)	WIDTH (ft)	DEPTH (in)
FES#1	3.00	0.50%	14.00	II	24.00	13.00	18.00
FES#19	3.00	0.50%	14.00	II	24.00	13.00	18.00
FLUME #1	XX	0.50%	5.00	II	24.00	13.00	18.00
FLUME #2	XX	0.50%	5.00	II	24.00	13.00	18.00

GENERAL NOTES: ALL APRONS TO BE INSTALLED AT 0.0% SLOPE

1. CLASS OF MEDIAN SIZE OF RIP-RAP AND LENGTH, WIDTH AND DEPTH OF APRON TO BE DESIGNED BY ENGINEER.
2. REFER TO THE CHARLOTTE-MECKLENBURG STORM WATER DESIGN MANUAL FOR RIP-RAP APRON DESIGN STANDARDS.
3. RIP-RAP SHOULD EXTEND UP BOTH SIDES OF THE APRON AND AROUND THE END TO THE PIPE OR CULVERT AT THE DISCHARGE OUTLET AT A MAXIMUM SLOPE OF 2:1 AND A HEIGHT NOT LESS THAN 1 THE PIPE DIAMETER OR CULVERT HEIGHT.
4. THERE SHALL BE NO OVERFLOW FROM THE END OF THE APRON TO THE SURFACE OF THE RECEIVING CHANNEL. THE AREA TO BE PAVED OR RIP-RAPPED SHALL BE UNDERCUT SO THAT THE INVERT OF THE APRON SHALL BE AT THE SAME GRADE (FLUSH) WITH THE SURFACE OF THE RECEIVING CHANNEL. THE APRON SHALL HAVE A CUT-OFF OR TOE WALL AT THE DOWNSTREAM END.
5. THE END WIDTH OF THE APRON SHALL EQUAL THE BOTTOM WIDTH OF THE RECEIVING CHANNEL. MAXIMUM TAPER TO THE RECEIVING CHANNEL TO BE 5:1.
6. ALL SUBGRADE FOR STRUCTURE TO BE COMPACTED TO 95% OR GREATER.
7. PLACING EITHER LOOSE OR COMPACTED FILL IN THE RECEIVING CHANNEL SHALL NOT BE ALLOWED.
8. NO BENDS OR CURVES IN THE HORIZONTAL ALIGNMENT OF THE APRON WILL BE PERMITTED.
9. DEPENDING ON SOIL CONDITIONS, WASHED STONE OR FILTER FABRIC WILL BE NECESSARY UNDER THE RIP-RAP.
10. ANY DISTURBED AREA FROM THE END OF THE APRON TO THE RECEIVING CHANNEL MUST BE STABILIZED.

RIP-RAP APRON AT FLARED END SECTION

SCALE: NTS — 8 / C-7.1

GENERAL NOTES:

1. FILTER FABRIC FENCE SHALL BE A MINIMUM OF 32" IN WIDTH AND SHALL HAVE A MINIMUM OF 6 LINE WIRES WITH 12" STAY SPACING.
2. WOVEN FILTER FABRIC TO BE USED WHERE SILT FENCE IS TO REMAIN FOR A PERIOD OF MORE THAN 30 DAYS.
3. STEEL POSTS SHALL BE 5'-0" IN HEIGHT AND BE OF THE SELF-FASTENER ANGLE STEEL TYPE.
4. WIRE FENCING SHALL BE AT LEAST #10 GAGE WITH A MINIMUM OF 6 LINE WIRES WITH 12" STAY SPACING.
5. TURN SILT FENCE UP SLOPE AT ENDS.
6. WIRE MESH SHALL BE MIN. 13 GAGE WITH MAXIMUM 12" OPENINGS.
7. WIRE AND WASHED STONE WILL BE REQUIRED AND NOTED ON THE PLANS WHEN:
   A. AT THE TOE OF SLOPES GREATER THAN 10 FEET VERTICAL (2:1 SLOPE)
   B. AT DENUDED LIMITS WHERE A REQUIRED UNDISTURBED BUFFER IS 50 FEET OR LESS AWAY.
8. ORANGE SAFETY FENCE IS REQUIRED AT BACK OF SILT FENCE (WITHIN 5 FT) WHEN GRADING IS ADJACENT TO SWIM BUFFERS OR WETLANDS (REFER TO SWIM BUFFER GUIDELINES).

MAINTENANCE NOTES:

1. FILTER BARRIERS SHALL BE INSPECTED BY THE FINANCIALLY RESPONSIBLE PARTY OR HIS AGENT IMMEDIATELY AFTER EACH RAINFALL AND AT LEAST DAILY DURING PROLONGED RAINFALL. ANY REPAIRS NEEDED SHALL BE MADE IMMEDIATELY.
2. SHOULD THE FABRIC DECOMPOSE OR BECOME INEFFECTIVE PRIOR TO THE END OF THE EXPECTED USABLE LIFE AND THE BARRIER STILL IS NECESSARY, THE FABRIC SHALL BE REPLACED PROMPTLY.
3. SEDIMENT DEPOSITS SHOULD BE REMOVED AFTER EACH STORM EVENT OR SILT FENCE SHOULD BE REPLACED. THEY MUST BE REMOVED WHEN DEPOSITS REACH APPROX. HALF THE HEIGHT OF THE BARRIER. ANY SEDIMENT DEPOSITS REMAINING IN PLACE AFTER THE SILT FENCE IS REMOVED SHALL BE DRESSED TO CONFORM TO THE EXISTING GRADE, PREPARED AND SEEDED.

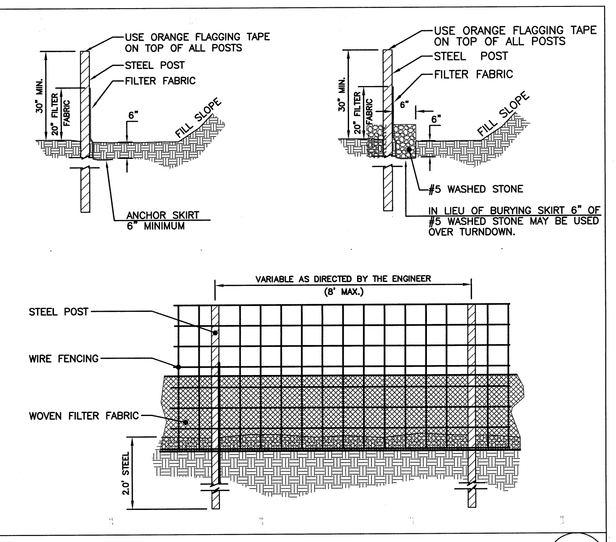

TEMPORARY SILT FENCE

SCALE: NTS — 4 / C-7.1

GENERAL NOTES:

1. RIPRAP SIZE TO BE DESIGNED BY ENGINEER.

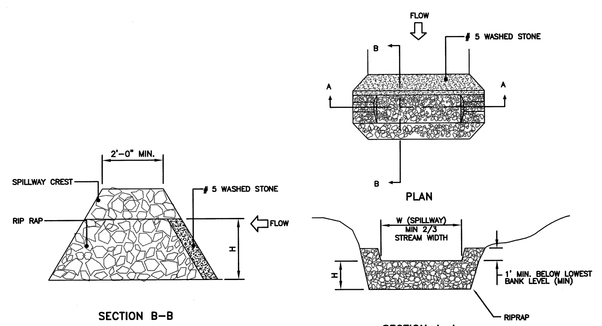

TEMPORARY ROCK CHECK DAM

SCALE: NTS — 15 / C-7.1

GENERAL NOTES:

1. DRIVE STEEL FENCE POST AT LEAST 18" INTO SOLID GROUND.
2. WOOD POSTS ARE NOT ACCEPTABLE.
3. USE STAPLES 1 FOOT APART TO ATTACH FABRIC TO "HOG WIRE".
4. BAFFLE SPACED AS PER PLAN.

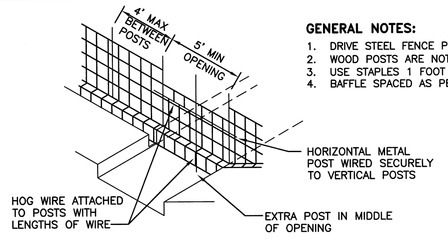

BAFFLE INSTALLATION STEP 1

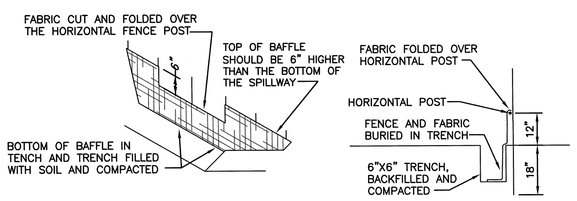

BAFFLE INSTALLATION STEP 2 — SECTION AT OPENING

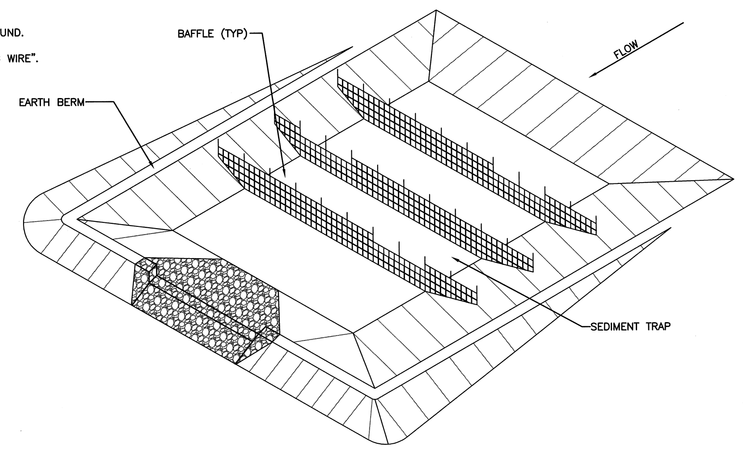

PERSPECTIVE VIEW

SILT FENCE BAFFLE INSTALLATION

SCALE: NTS — 10 / C-7.1

GENERAL NOTES:

1. SEDIMENT SHALL BE REMOVED AND TRAP RESTORED TO ITS ORIGINAL DIMENSIONS WHEN THE SEDIMENT HAS ACCUMULATED TO 1/2 THE DESIGN DEPTH OF THE TRAP.
2. REMOVED SEDIMENT SHALL BE DEPOSITED IN A SUITABLE AREA AND IN SUCH A MANNER THAT IT WILL NOT ERODE.
3. THE STRUCTURE SHALL BE INSPECTED AFTER EACH STORM EVENT BY THE FINANCIALLY RESPONSIBLE PARTY OR HIS AGENT AFTER EACH STORM EVENT AND REPAIRS MADE AS NECESSARY.
4. CONSTRUCTION OPERATIONS SHALL BE CARRIED OUT IN SUCH A MANNER THAT EROSION AND WATER POLLUTION ARE MINIMIZED.
5. THE SEDIMENT TRAP SHALL BE REMOVED AND THE AREA STABILIZED WHEN THE DRAINAGE BASIN HAS BEEN PROPERLY STABILIZED.
6. SILT FENCE INSTALLATION SHALL BE IN ACCORDANCE WITH CMLD STD. 30.06 OR A/L7.1.
7. IF HARDWARE CLOTH IS USED INCREASE THE WASHED STONE TO A MINIMUM OF 20 INCHES.

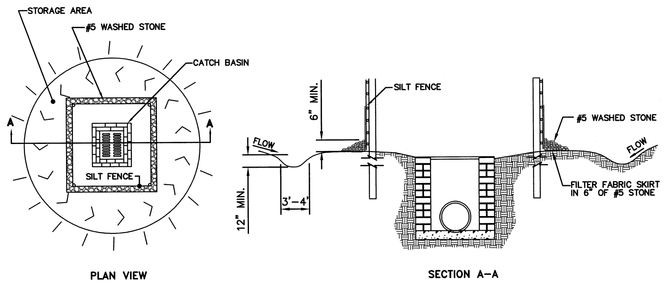

SILT FENCE INLET SEDIMENT TRAP

SCALE: NTS — 11 / C-7.1

GENERAL SEDIMENT BASIN NOTES:

1. AREA UNDER EMBANKMENT SHALL BE CLEARED, GRUBBED, AND STRIPPED OF ANY VEGETATION AND ROOT MAT, THE POOL AREA SHALL BE CLEARED.
2. THE FILL MATERIAL FOR THE EMBANKMENT SHALL BE FREE OF ROOTS OR OTHER WOODY VEGETATION AS WELL AS OVERSIZED STONES, ROCKS, ORGANIC MATERIAL, OR OTHER OBJECTIONABLE MATERIAL.
3. SEDIMENT SHALL BE REMOVED AND TRAP RESTORED TO ITS ORIGINAL DIMENSIONS WHEN THE SEDIMENT HAS ACCUMULATED TO ONE-HALF THE DESIGN DEPTH OF THE TRAP. REMOVED SEDIMENT SHALL BE DEPOSITED IN A SUITABLE AREA IN SUCH A MANNER THAT IT WILL NOT ERODE.
4. THE TRAP SHALL BE INSPECTED AFTER EACH RAIN AND REPAIRS MADE AS NECESSARY.
5. CONSTRUCTION OPERATION SHALL BE CARRIED OUT IN SUCH A MANNER THAT EROSION AND WATER POLLUTION IS MINIMIZED.
6. ALL CUT AND FILL SLOPES SHALL BE 2:1 OR FLATTER, UNLESS CERTIFIED BY A REGISTERED GEOTECHNICAL ENGINEER.
7. SEDIMENT BASIN EMBANKMENTS SHOULD BE PROVIDED WITH EROSION CONTROL AND STABILIZATION.
8. STORAGE AREA IS SHOWN AS RECTANGULAR FOR ILLUSTRATIVE PURPOSES ONLY, AND MAY BE CONSTRUCTED IN ANY SHAPE PROVIDED THE MINIMUM STORAGE VOLUME REQUIREMENT IS MET. THE BASIN SHOULD ALSO BE ORIENTED SUCH THAT THE FILTER AND THE MAIN FLOW OF WATER AND SEDIMENT ARE ON OPPOSITE ENDS ON THE LONGER BASIN DIMENSIONS.
9. REQUIRED STORAGE IS 1800 CUBIC FEET OF STORAGE VOLUME PER ONE ACRE OF DRAINAGE AREA. IF CLEAR WATER FROM UNDISTURBED AREAS IN DRAINAGE BASINS ARE TAKEN AROUND OR THROUGH THE DENUDED AREA BY NON-EROSIVE MEASURES THEN BASINS MAY BE SIZED BY DENUDED ACRES. RECOMMENDED STORAGE IS 1800 CUBIC FEET OF STORAGE PER 1 ACRE OF DRAINAGE AREA.
10. THE LENGTH OF THE STONE OUTLET (SPILLWAY) IS TO BE BASED ON A 10-YEAR STORM.
11. WHENEVER TOPOGRAPHY ALLOWS, THE BASIN LENGTH SHOULD BE TWICE (2X) THE BASIN WIDTH, TO ALLOW FOR SETTLING, BAFFLES SHOULD BE PROVIDED IN THE BASIN WHERE THE LENGTH IS LESS THAN TWICE THE WIDTH.
12. CLEANOUT STAKES SHALL BE PLACED IN ALL SEDIMENT BASINS AT THE LOW POINT IN THE BASIN. THE STAKES SHALL BE MARKED SHOWING THE HALF-FULL, CLEANOUT POINT, OF THE BASIN.
13. SAFETY FENCING 3' HIGH SHOULD BE PLACED AROUND ALL SEDIMENT BASINS.
14. FOR DESIGN OF RISER TYPE SEDIMENT BASINS, REFER TO THE NORTH CAROLINA DEPARTMENT OF ENVIRONMENT AND NATURAL RESOURCES EROSION AND SEDIMENT CONTROL PLANNING AND DESIGN MANUAL.
15. FOR SLOPES GREATER THAN 10' IN LENGTH AND PROTECTED BY SILT FENCE AT THE TOE OF THE SLOPE, SLOPE TERRACING WILL BE REQUIRED.
16. THE BERM ON SEDIMENT BASINS SHALL BE SEEDED ONCE FINAL GRADE HAS BEEN REACHED. THE SILT FENCE MAY BE REMOVED IF PERMISSION HAS BEEN GRANTED BY THE CITY/COUNTY LAND DEVELOPMENT INSPECTOR AFTER THE GRASS HAS GERMINATED AND STABLE GROUND HAS BEEN ESTABLISHED.
17. WASHED STONE AND WIRE BACKING SHALL BE USED WITH SILT FENCE WHENEVER SILT FENCE IS PLACED AT THE TOE OF A SLOPE >10' VERTICAL OR ALONG ANY CHANNEL OR WATER COURSE WHERE 50' OF BUFFER IS NOT REQUIRED.

SEDIMENT BASIN NOTES

SCALE: NTS — 7 / C-7.1

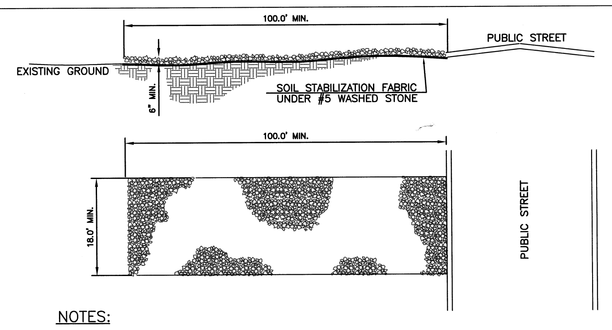

NOTES:

1. A STABILIZED ENTRANCE PADE OF #5 WASED STONE OR RAIL ROAD BALLAST SHALL BE LOCATED WHERE TRAFFIC WILL ENTER OR LEAVE THE CONSTRUCTION SITE ONTO A PUBLIC STREET.
2. FILTER FABRIC OR COMPACTED CRUSHER RUN STONE MAY BE USED AS A BASE FOR THE CONSTRUCTION ENTRANCE.
3. THE ENTRANCE SHALL BE MAINTAINED IN A CONDITION WHICH WILL PREVENT TRACKING OR FLOWING OF SEDIMENT ONTO PUBLIC STREETS OR EXISTING PAVEMENT. THIS MAY REQUIRE PERIODIC TOP DRESSING WITH ADDITIONAL STONE AS CONDITIONS WARRANT AND REPAIR OR CLEANOUT OF ANY MEASURES USED TO TRAP SEDIMENT.
4. ANY SEDIMENT SPILLED, DROPPED, WASHED, OR TRACKED ONTO PUBLIC STREETS MUST BE REMOVED IMMEDIATELY.
5. WHEN APPROPRIATE, WHEELS MUST BE CLEANED TO REMOVE SEDIMENT PRIOR TO ENTERING A PUBLIC STREET. WHEN WASHING IS REQUIRED, IT SHALL BE DONE IN AN AREA STABILIZED WITH CRUSHED STONE WHICH DRAINS INTO AN APPROVED SEDIMENT BASIN.
6. SOIL STABILIZATION FABRIC (AS SPECIFIED BY THE DESIGNER) SHALL BE USED.

STABILIZED CONSTRUCTION ENTRANCE

SCALE: NTS — 6 / C-7.1

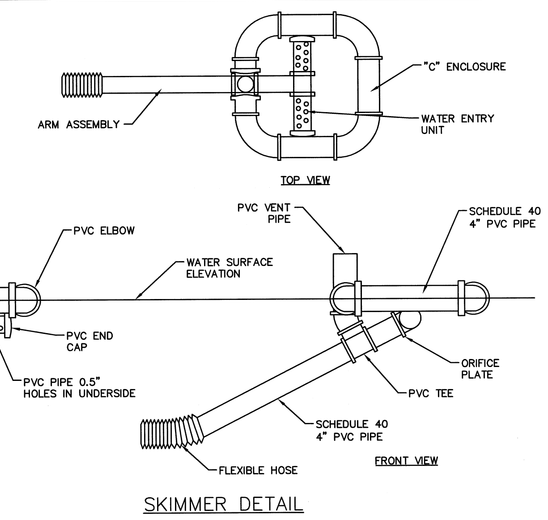

SKIMMER DETAIL

SKIMMER DETAIL

SCALE: NTS — 3 / C-7.1

ACCESSIBLE PARKING REQUIREMENTS

TOTAL PARKING SPACES PROVIDED	MINIMUM NUMBER OF ACCESSIBLE SPACES SPACES REQUIRED	MINIMUM NUMBER OF ACCESSIBLE SPACES REQUIRED TO BE VAN ACCESSIBLE
1 TO 25	1	1
26 TO 50	2	1
51 TO 75	3	1
76 TO 100	4	1
101 TO 150	5	1
151 TO 200	6	1
201 TO 300	7	1
301 TO 400	8	1
401 TO 500	9	2
501 TO 1000	2% OF TOTAL	1 IN EVERY 8 ACCESSIBLE SPACES
1001 AND OVER	20 PLUS 1 FOR EACH 100 OVER 1000	1 IN EVERY 8 ACCESSIBLE SPACES

SECTION 4.1.2 (5) OF THE AMERICANS WITH DISABILITIES ACT (ADA). SEE 4.1.2.(5) (d) FOR MEDICAL CARE FACILITIES

NOTES:

1. ALL 12"x18" ACCESSIBLE SIGNS (R7-8a & R7-1) SHALL BE MOUNTED AT 7 FEET FROM GRADETO BOTTOM EDGE OF SIGN FACE (MUTCD). MOUNTING HEIGHT CAN BE REDUCED TO 5 FEET IF PLACED IN AN AREA BETWEEN SIDEWALK AND BUILDING FACE IN WHICH PEDESTRIANS ARE NOT EXPECTED TO USE.
2. REFER TO MANUAL ON UNIFORM TRAFFIC CONTROL DEVICES, (MUTCD) U.S. DEPARTMENT OF TRANSPORTATION AND NORTH CAROLINA DEPARTMENT OF TRANSPORTATION SUPPLEMENT.
3. IF ACCESSIBLE ROUTE IS A RAISED SIDEWALK AREA, THEN RAMPS ARE REQUIRED AT LOADING ZONE AREA.

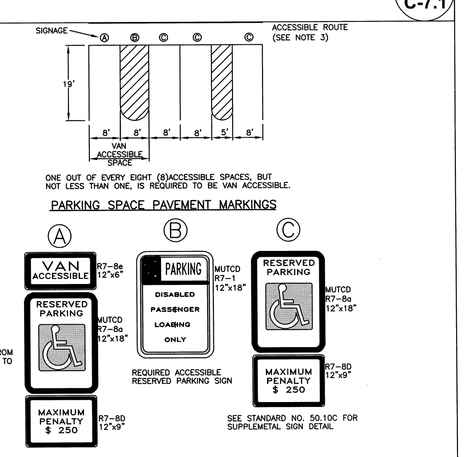

SEE STANDARD NO. 50.10B & 50.10C FOR SUPPLEMENTAL SIGN DETAIL

SEE STANDARD NO. 50.10C FOR SUPPLEMENTAL SIGN DETAIL

ACCESSIBLE PARKING AND SIGNAGE STANDARDS

ACCESSIBLE PARKING AND SIGNAGE STANDARDS

SCALE: NTS — 2 / C-7.1

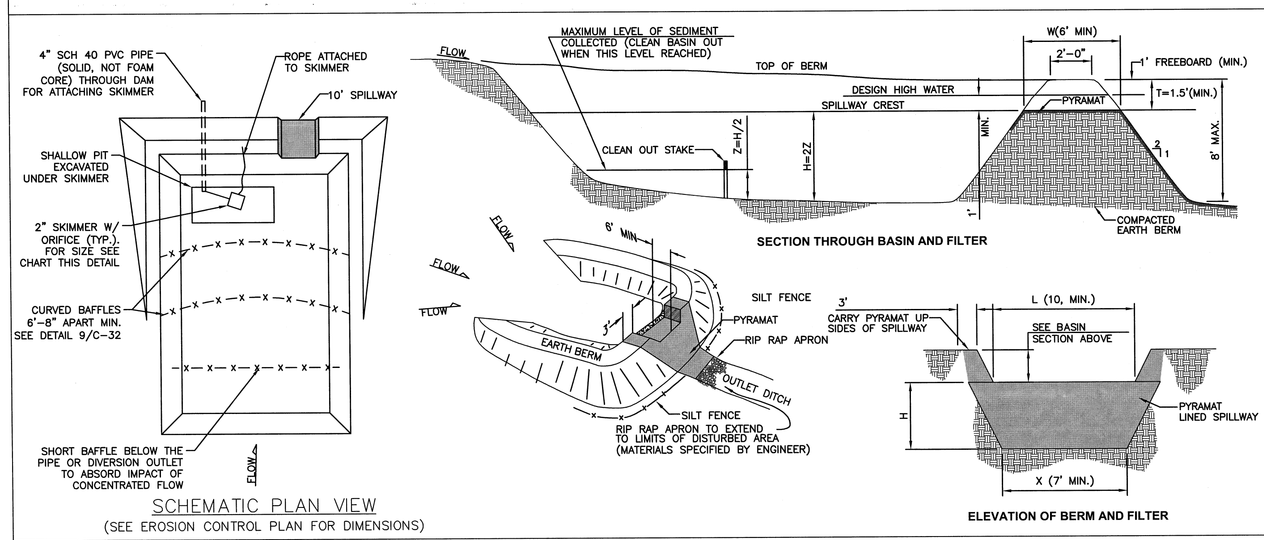

SEDIMENT BASIN DATA INITIAL PHASE:

BASIN #	DISTURBED AREA	DRAINAGE AREA	REQUIRED STORAGE	PROVIDED STORAGE	STORAGE DIMENSIONS (APPROX.) TOP	ELEV	BOTTOM	ELEV	Z	TOP OF BERM DIMENSIONS	ELEV	H	L	T	W	X
1	11.60 AC	12.68 AC	22,824 CF	35,052 CF	SEE PLAN	2180	SEE PLAN	2176	1	SEE PLAN	2180	2	10	2	6	7

SEDIMENT BASIN DATA FINAL PHASE:

BASIN #	DISTURBED AREA	DRAINAGE AREA	REQUIRED STORAGE	PROVIDED STORAGE	STORAGE DIMENSIONS (APPROX.) TOP	ELEV	BOTTOM	ELEV	Z	TOP OF BERM DIMENSIONS	ELEV	H	L	T	W	X
1	11.60 AC	12.68 AC	22,824 CF	35,052 CF	SEE PLAN	2180	SEE PLAN	2176	1	SEE PLAN	2180	2	10	2	6	7

SKIMMER SEDIMENT BASIN

SCALE: NTS — 5 / C-7.1

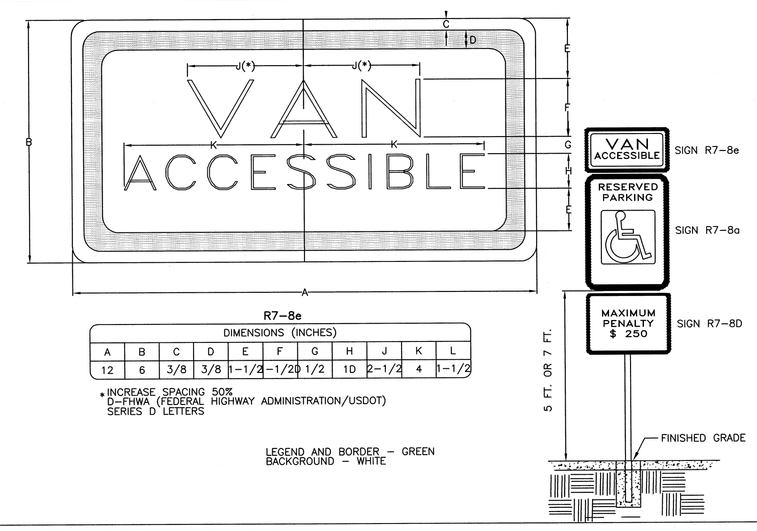

R7-8e

DIMENSIONS (INCHES)										
A	B	C	D	E	F	G	H	J	K	L
12	6	3/8	3/8	1-1/2	1-1/2	0 1/2	1D	2-1/2	4	1-1/2

* INCREASE SPACING 50%
D-FHWA (FEDERAL HIGHWAY ADMINISTRATION/USDOT) SERIES D LETTERS

LEGEND AND BORDER - GREEN
BACKGROUND - WHITE

HANDICAP ACCESSIBLE SIGNAGE (R7-8E)

SCALE: NTS — 1 / C-7.1

MOSELEYARCHITECTS
A PROFESSIONAL CORPORATION
11430 NORTH COMMUNITY HOUSE ROAD, GIBSON BUILDING SUITE 225, CHARLOTTE, NC 28277
PHONE (704) 540-3755 FAX (704) 540-3754
MOSELEYARCHITECTS.COM

NORTH CAROLINA PROFESSIONAL SEAL 29628 ENGINEER BRIAN M. PIPER

HILLANDALE ELEMENTARY SCHOOL
SITE DETAILS
HENDERSON COUNTY PUBLIC SCHOOLS
HENDERSON COUNTY, NORTH CAROLINA

PROJECT NO: MOSELEY MAC-4090-0006
DATE: 12/10/07
REVISIONS:
DRAWN BY:

C7.1

NYLOPLAST DRAIN BASIN WITH ADD-A-BRANCH

PIPE SIZE	PART #	MIN. BASIN SIZE
4"	6004AG	8"
6"	6006AG	10"
8"	6008AG	12"
10"	6010AG	15"
12"	6012AG	18"
15"	6015AG	24"
4"	6004AG _ 30	SPEC. TO 30"
6"	6006AG _ 30	SPEC. TO 30"
8"	6008AG _ 30	SPEC. TO 30"
10"	6010AG _ 30	SPEC. TO 30"
12"	6012AG _ 30	SPEC. TO 30"
15"	6015AG _ 30	SPEC. TO 30"
18"	6018AG _ 30	30"

1 - ADD-A-BRANCH (PATENT NO. 6349364) AVAILABLE FOR ALL 8" - 30" STRUCTURE OPTIONS (CUSTOM BASIN, ROAD & HIGHWAY, & CURB INLET)

2 - FRAMES, GRATES, HOODS, & BASS PLATES SHALL BE DUCTILE IRON PER ASTM A536 GRADE 70-50-05, WITH THE EXCEPTION OF THE BRONZE GRATES

3 - DRAINAGE BASIN TO BE CUSTOM MANUFACTURED ACCORDING TO PLAN DETAILS. PRIMENA BASIN NESTING DESIGNS OVER 84" DUE TO SHIPPING RESTRICTIONS SEE DRAWING NO. 7001-110-006

5 - DRAINAGE CONNECTION STUB JOINT TIGHTNESS SHALL CONFORM TO ASTM D3212 FOR CORRUGATED HDPE (ADS & HANCOR DUAL WALL) & SDR 35 PVC

6 - ADD-A-BRANCH ADAPTERS CAN BE MOUNTED ON ANY ANGLE 0° TO 360°, TO DETERMINE MINIMUM ANGLE BETWEEN ADAPTERS SEE DRAWING NO. 0110-110-005, 0110-110-006, 0110-110-007, & 0110-110-008

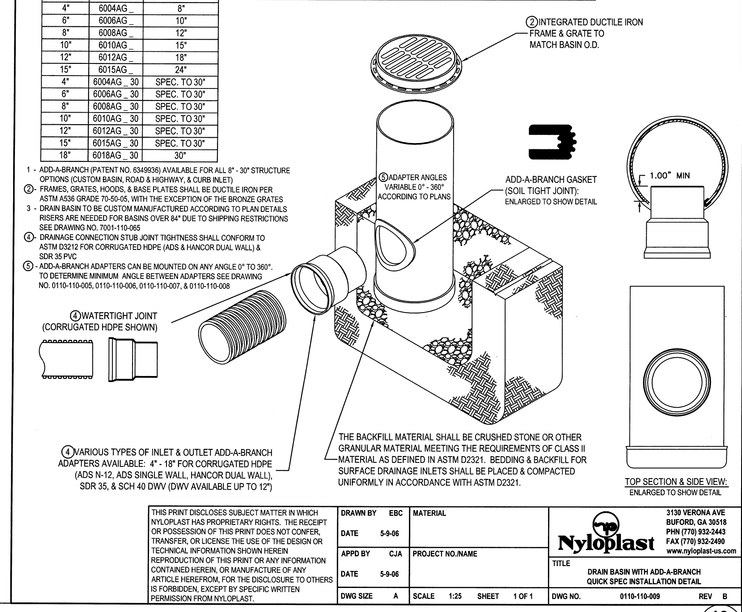

THIS PRINT DISCLOSES SUBJECT MATTER IN WHICH NYLOPLAST HAS PROPRIETARY RIGHTS. THE RECEIPT OR POSSESSION OF THIS PRINT DOES NOT CONFER, TRANSFER, OR LICENSE THE USE OF THE DESIGN OR TECHNICAL INFORMATION SHOWN HEREIN. REPRODUCTION OF THIS PRINT OR ANY INFORMATION CONTAINED HEREIN, OR MANUFACTURE OF ANY ARTICLE HEREFROM, FOR THE DISCLOSURE TO OTHERS IS FORBIDDEN, EXCEPT BY SPECIFIC WRITTEN PERMISSION FROM NYLOPLAST.

DRAWN BY	ESC	MATERIAL	
DATE	5-9-06		
APPD BY	CJA	PROJECT NO./NAME	
DATE	5-9-06		
DWG SIZE	A	SCALE 1:25	SHEET 1 OF 1

Nyloplast
3109 VERONA AVE.
BUFORD, GA 30518
PHN (770) 932-2443
FAX (770) 932-2490
www.nyloplast-us.com

TITLE: DRAIN BASIN WITH ADD-A-BRANCH QUICK SPEC INSTALLATION DETAIL

DWG NO. 0110-110-009 REV B

NYLOPLAST INLET DETAIL N.T.S. 13 C-7.2

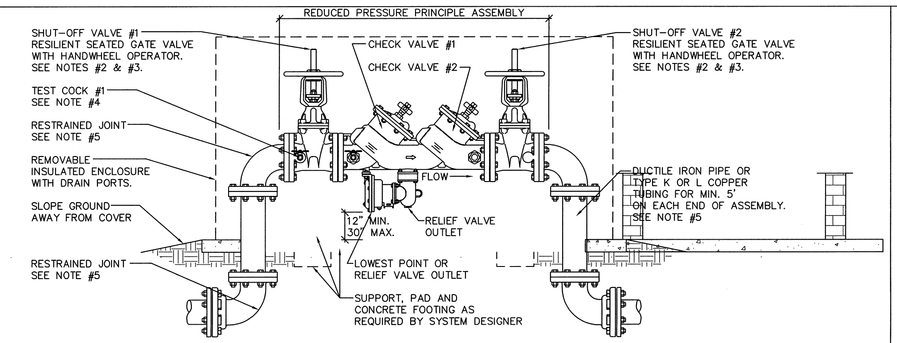

NOTES:

1. REDUCED PRESSURE PRINCIPLE ASSEMBLIES (RP) MUST CONFORM TO HENDERSONVILLE CITY WATER SPECIFICATIONS. REFER TO HENDERSONVILLE CITY WATER APPROVED LIST OF BPA'S.
2. HENDERSONVILLE CITY WATER APPROVED RP INCLUDES SHUT-OFF VALVES #1 AND #2 AS PART OF THE ASSEMBLY. NO SUBSTITUTIONS SHALL BE PERMITTED.
3. FIRE LINE SERVICES SHALL HAVE OUTSIDE STEM AND YOKE (OS & Y) HANDWHEEL OPERATORS, IF SERVING FIRE SPRINKLERS, TAMPER SWITCHES ARE REQUIRED.
4. TEST COCK #1 SHALL BE UPSTREAM OF SHUT-OFF VALVE #1 AND IS PART OF THE APPROVED ASSEMBLY.
5. PIPE MATERIAL AND FITTINGS SHALL BE AS SPECIFIED IN HENDERSONVILLE CITY WATER STANDARDS SPECIFICATION. ALL JOINTS SHALL BE RESTRAINED WITH MEGALUG RESTRAINTS OR APPROVED EQUAL.
6. 8" – 10" RP SHALL BE SUPPORTED AT CENTER WITH BRICK PEDESTAL AND SHALL NOT BLOCK RELIEF VALVE ON DRAIN PORT.
7. ABOVE GROUND ENCLOSURE SHALL BE HEATED TO MAINTAIN MINIMUM 40°F TEMPERATURE..
8. ALL LOCATIONS FOR BPA'S REQUIRE HENDERSONVILLE CITY WATER APPROVAL.
9. NO TAPS, BRANCHES, FH'S OR OTHER ACCESSORIES ARE PERMITTED ON THE PIPING BETWEEN THE BPA & METER.

REDUCED PRESSURE BACKFLOW ASSEMBLY 2.5"–10" N.T.S. 12 C-7.2

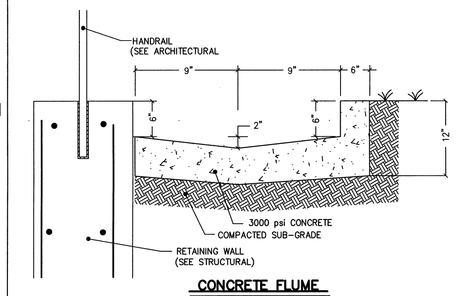

CONCRETE FLUME
NOT TO SCALE

24" WALL FLUME N.T.S. 11 C-7.2

WATER QUALITY OUTLET CONTROL STRUCTURE INFORMATION

WATER QUALITY POND	ORIFICE SIZE (IN.)	ORIFICE ELEVATION	TOP OF BOX	SPILLWAY ELEVATION	OUTLET PIPE (IN.)
1	6	2176.00	2180.00	2178.96	18

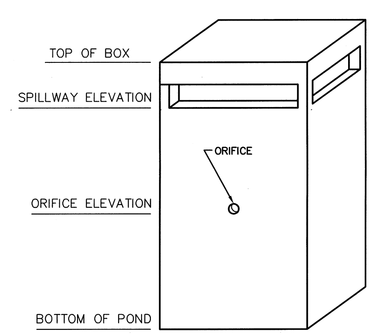

WATER QUALITY OUTLET CONTROL STURCTURE N.T.S. 2 C-7.2

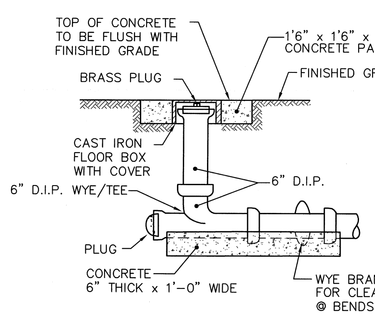

NEW CLEANOUT N.T.S. 10 C-7.2

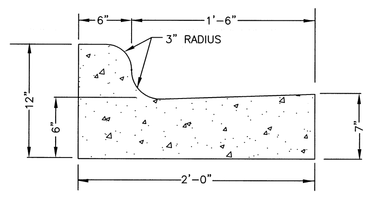

STANDARD 2' CURB AND GUTTER 9 C-7.2

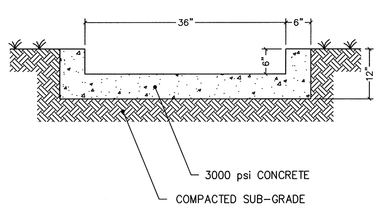

CONCRETE FLUME
NOT TO SCALE

36" FLUME N.T.S. 8 C-7.2

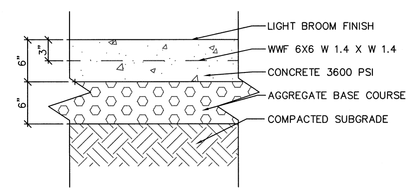

HEAVY DUTY CONCRETE N.T.S. 5 C-7.2

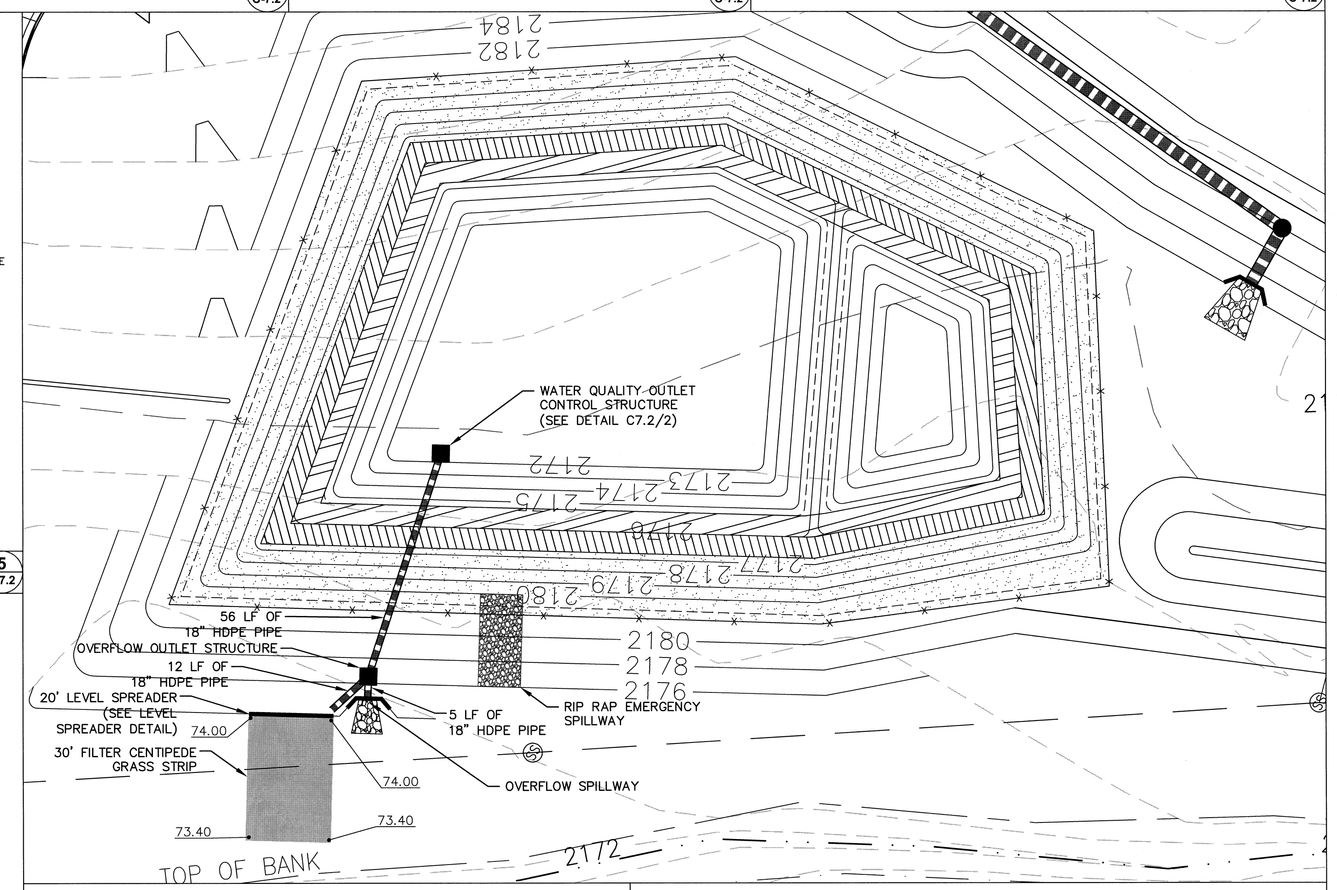

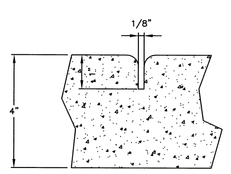

GROOVE JOINT IN SIDEWALK

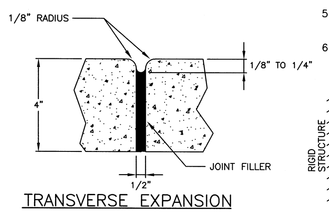

TRANSVERSE EXPANSION JOINT IN SIDEWALK

GENERAL NOTES:

1. A GROOVE JOINT 1" DEEP WITH 1/8" RADII SHALL BE REQUIRED IN THE CONCRETE SIDEWALK AT 5' INTERVALS. ONE 1/2" EXPANSION JOINT WILL BE REQUIRED AT 45' INTERVALS NOT TO EXCEED 50' AND MATCHING EXPANSION/CONSTRUCTION JOINT IN ADJACENT CURB. A SEALED 1/2" EXPANSION JOINT WILL BE REQUIRED WHERE THE SIDEWALK JOINS ANY RIGID STRUCTURE.
2. SIDEWALK AT DRIVEWAY ENTRANCES TO BE 6" THICK.
3. WIDTH OF SIDEWALK ON THOROUGHFARE STREETS SHALL BE A MINIMUM OF 5'. WIDTH OF SIDEWALKS IN THE CENTRAL BUSINESS DISTRICT WILL BE DETERMINED BY THE CITY/COUNTY ENGINEER.
4. WIDTH OF SIDEWALKS ON NON-THOROUGHFARE STREETS SHALL BE A MINIMUM OF 4'. UNLESS OTHERWISE SPECIFIED BY TOWN SUBDIVISION ORDINANCE.
5. SIDEWALK TO BE POURED TO END OF RADIUS AT INTERSECTING STREETS.
6. CONCRETE COMPRESSIVE STRENGTH SHALL BE 3600 PSI. IN 28 DAYS.

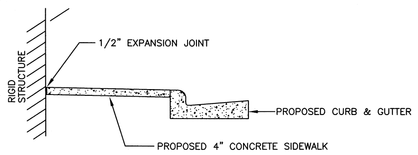

DETAILS SHOWING EXPANSION JOINTS IN CONCRETE SIDEWALK

STANDARD CONCRET SIDEWALK N.T.S. 7 C-7.2

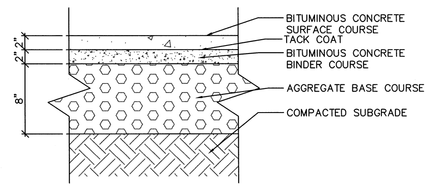

DIMENSIONS MUST BE CONFIRMED WITH GEOTECHNICAL REPORT

HEAVY DUTY BITUMNOUS PAVEMENT N.T.S. 4 C-7.2

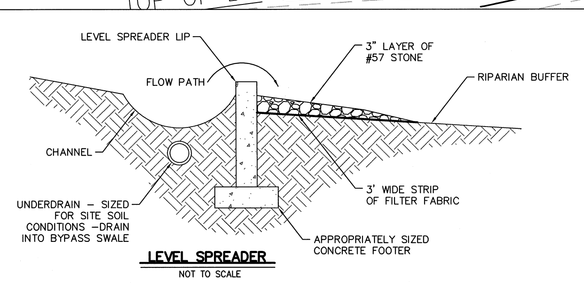

LEVEL SPREADER
NOT TO SCALE

LEGEND (LANDSCAPE PLAN)

SYMBOL

- SWALLOW LAND PLANTS
- SWALLOW WATER PLANTS
- GROUNDCOVER

WATER QUALITY POND PLANTING DETAIL
PLANTING SCHEDULE

SYM #	COMMON NAME	BOTANICAL NAME	SIZE	ROOT SPAC'G	NOTES
SWALLOW WATER PLANTS					
24	SAWGRASS	CLADIUM JAMAICENSE			
24	FOXTAIL	ALOPERCURUS HOWELLII			
24	COPPER IRIS	IRIS FULVA			
SWALLOW LAND PLANTS					
24	SWAMP MILKWEED	ASCLEPIAS INCARNATE			
24	SWEETSPIRE	ITEA VIRGINICA			
24	LOBLOLLY BAY	GORDONIA LASIANTHUS			
GROUNDCOVER AND VINES					
8,772 SF	CENTIPEDE (EREMOCHLOA BUSE)				

WATER QUALITY POND PLANTING DETAIL N.T.S. 1 C-7.2

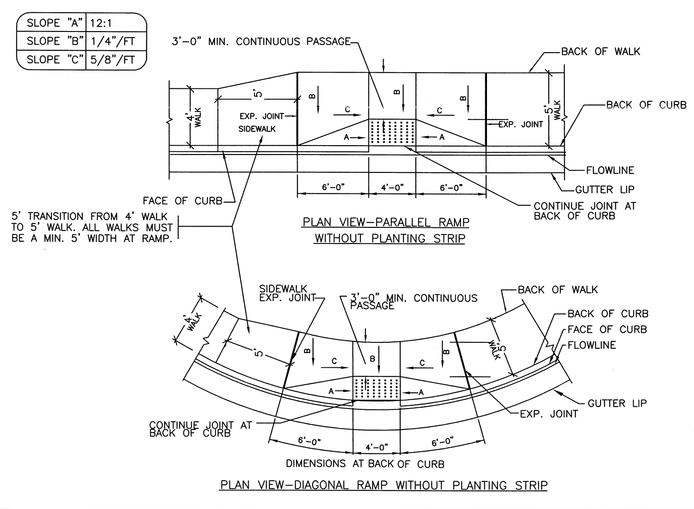

HANDICAP ACCESSIBLE RAMP N.T.S. 6 C-7.2

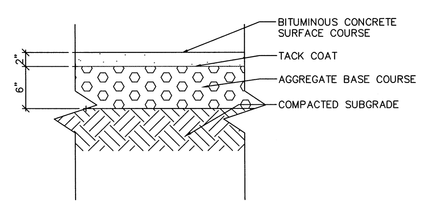

DIMENSIONS MUST BE CONFIRMED WITH GEOTECHNICAL REPORT

LIGHT PAVING SECTION N.T.S. 3 C-7.2

MOSELEY ARCHITECTS
A PROFESSIONAL CORPORATION
11430 NORTH COMMUNITY HOUSE ROAD, GIBSON BUILDING SUITE 225, CHARLOTTE, NC 28277
PHONE (704) 540-3755 FAX (704) 540-3754
MOSELEYARCHITECTS.COM

NORTH CAROLINA PROFESSIONAL SEAL 19863 ENGINEER BRIAN M. WHITE

HILLANDALE ELEMENTARY SCHOOL
SITE DETAILS
HENDERSON COUNTY PUBLIC SCHOOLS
HENDERSON COUNTY, NORTH CAROLINA

PROJECT NO: MOSELEY: MAC-409-006
DATE: 12/10/07
REVISIONS:
DRAWN BY:

C7.2

GENERAL NOTES:

1. ALL WORK AND MATERIALS SHALL CONFORM TO THE LATEST EDITION OF THE HENDERSON COUNTY LAND USE ORDINANCE.

2. ALL WORK AND MATERIALS SHALL CONFORM TO THE LATEST EDITION OF THE NORTH CAROLINA DEPARTMENT OF TRANSPORTATION (NCDOT) STANDARD SPECIFICATIONS FOR ROADS AND STRUCTURES UNLESS OTHERWISE SPECIFIED IN THE HENDERSON COUNTY LAND USE ORDINANCE.

3. ALL STREETS WHICH ARE NOT A STATE MAINTAINED STREET SHALL BE GRADED AND PAVED BY THE DEVELOPER IN ACCORDANCE WITH NCDOT, DIVISION OF HIGHWAYS STANDARDS FOR PAVED STREETS WITH CURB AND GUTTER.

4. TRAFFIC CONTROL DEVICES. TRAFFIC CONTROL DEVICES SUCH AS STOP, YIELD AND SPEED LIMIT SIGNS (BUT NOT INCLUDING ELECTRIC OR ELECTRONIC TRAFFIC SIGNALS) SHALL BE INSTALLED ON PUBLIC STREETS BY THE DEVELOPER AT THE APPROPRIATE LOCATIONS AS DETERMINED BY NCDOT. INSTALLATION STANDARDS AND MATERIALS SHALL BE IN CONFORMANCE WITH NCDOT STANDARDS FOR SUCH DEVICES.

5. SIGHT TRIANGLES SHOWN ARE THE MINIMUM REQUIRED. FURTHER REQUIREMENTS MAY BE MADE BY THE NORTH CAROLINA DEPARTMENT OF TRANSPORTATION (NCDOT).

6. ALL CONCRETE SHALL HAVE A MINIMUM COMPRESSIVE STRENGTH OF 3600 P.S.I. AT 28 DAYS AND SHALL COMPLY WITH SECTION 1000 OF THE NCDOT STANDARD SPECIFICATIONS.

7. ALL CONCRETE SHALL BE CURED WITH 100% RESIN BASE, WHITE PIGMENTED CURING COMPOUND WHICH MEETS A.S.T.M. SPECIFICATIONS C-309, TYPE 1, APPLIED AT ONE GALLON TO 400 SF WITHIN 24 HOURS OF PLACEMENT OF CONCRETE.

8. ALL BACKFILL SHALL BE NON-PLASTIC IN NATURE, FREE FROM ROOTS, VEGETATIVE MATTER, WASTE, CONSTRUCTION MATERIAL, OR OTHER OBJECTIONABLE MATERIAL. SAID MATERIAL SHALL BE CAPABLE OF BEING COMPACTED BY MECHANICAL MEANS AND THE MATERIAL SHALL HAVE NO TENDENCY TO FLOW OR BEHAVE IN A PLASTIC MANNER UNDER THE TAMPING BLOWS OR PROOF ROLLING.

9. ALL TRENCHES IN THE STREET RIGHT OF WAY SHALL BE BACKFIELD WITH SUITABLE MATERIAL IMMEDIATELY AFTER THE PIPE IS LAID.

10. ALL SUBGRADE FOR ROADS SHALL BE COMPACTED TO 100% OF THE MAXIMUM DENSITY OBTAINABLE WITH THE STANDARD PROCTER TEST.

11. CONTRACTOR SHALL MAINTAIN TWO WAY TRAFFIC AT ALL TIMES WHEN WORKING WITHIN EXISTING STREETS. THE CONTRACTOR SHALL PLACE AND MAINTAIN SIGNS, DANGER LIGHTS, BARRICADES, AND FURNISH WATCHMEN OR FLAGMEN TO DIRECT TRAFFIC IN ACCORDANCE WITH THE WORK AREA TRAFFIC CONTROL HANDBOOK (W.A.T.C.H.).

12. SIDEWALKS SHALL BE CONSTRUCTED OF NOT LESS THAN 3600 PSI CONCRETE AND SHALL BE FOUR (4) INCHES THICK, CONSTRUCTED ON AN ADEQUATELY GRADED BASE.

13. SUBGRADE FOR SIDEWALKS SHALL BE COMPACTED TO 95% OF THE MAXIMUM DENSITY OBTAINABLE WITH THE STANDARD PROCTER TEST. THE SURFACE OF THE SIDEWALK SHALL BE STEEL TROWEL AND LIGHT BROOM FINISHED AND CURED WITH AN ACCEPTABLE CURING COMPOUND. TOOLED JOINTS SHALL BE PROVIDED AT AN INTERVAL NOT LESS THAN FIVE (5) FEET AND EXPANSION JOINTS AT INTERVALS NOT MORE THAN 45 FEET. THE SIDEWALK SHALL HAVE A LATERAL SLOPE OF 1/4" PER FOOT.

14. THE ELEVATION OF THE SIDEWALK SHALL BE RELATED TO THE ELEVATION OF THE CROWN OF THE ADJACENT ROADWAY. THE SIDEWALK SHALL BE NO LESS THAN SIX (6) INCHES OR MORE THAN 18 INCHES ABOVE THE ROADWAY CROWN, EXCEPT THAT THE CROSSWALK ELEVATIONS SHALL BE PROPERLY RELATED TO THE EXISTING OR PROPOSED ROADWAY CURB.

15. IN ROLLY AND HILLY TERRAINS, SWEEPING OF THE STONE BASE AND/OR APPLICATION OF A TACK COAT MAY BE REQUIRED NEAR INTERSECTIONS. THESE REQUIREMENTS WILL BE ESTABLISHED BY THE INSPECTOR BASED ON FIELD CONDITIONS.

16. APPROVAL OF THIS PLAN IS NOT AN AUTHORIZATION TO GRADE ADJACENT PROPERTIES. WHEN FIELD CONDITIONS WARRANT OFF-SITE GRADING, PERMISSION MUST BE OBTAINED FROM THE AFFECTED PROPERTY OWNERS.

17. IN ORDER TO ENSURE PROPER DRAINAGE, KEEP A MINIMUM OF 0.5% SLOPE ON THE CURB.

18. SUBSURFACE DRAINAGE FACILITIES MAY BE REQUIRED IN THE STREET RIGHT-OF-WAY IF DEEMED NECESSARY BY THE INSPECTOR.

19. THE PURPOSE OF THE STORM DRAINAGE EASEMENT (SDE) IS TO PROVIDE STORM WATER CONVEYANCE AND ANY STRUCTURES AND/OR BSTRUCTION TO STORM WATER FLOW IS PROHIBITED.

20. HIGH DENSITY POLYETHYLENE (HDPE) STORM DRAINAGE PIPE INSTALLED WITHIN EXISTING OR PROPOSED PUBLIC STREET RIGHT-OF-WAY MUST BE APPROVED BY HENDERSON COUNTY/NCDOT INSPECTOR OR ENGINEER PRIOR TO PLACEMENT OF THE MATERIAL WITHIN THE PUBLIC STREET RIGHT-OF-WAY.

21. THE DEVELOPER SHALL MAINTAIN EACH STREAM, CREEK, OR BACKWASH CHANNEL IN AN UNOBSTRUCTED STATE AND SHALL REMOVE FROM THE CHANNEL AND BANKS OF THE STREAM ALL DEBRIS, LOGS, TIMBER, JUNK AND OTHER ACCUMULATIONS.

22. SHOP DRAWINGS SHALL BE PREPARED FOR ANY RETAINING WALLS CONSTRUCTED WITHIN THE PROJECT LIMITS. SHOP DRAWINGS SHALL BE PREPARED, SEALED AND SIGNED BY A LICENSED PROFESSIONAL ENGINEER REGISTERED IN THE STATE OF NORTH CAROLINA. SHOP DRAWINGS SHALL BE SUBMITTED TO THE CONSULTING ENGINEER FOR REVIEW TO VERIFY COMPLIANCE WITH SITE DESIGN PRIOR TO CONSTRUCTION.

23. PRIOR TO INSTALLATION, PE SEALED SHOP DRAWINGS FOR UNDERGROUND DETENTION SYSTEMS MUST BE PROVIDED.

24. A RIGHT-OF-WAY ENCROACHMENT AGREEMENT IS REQUIRED FOR THE INSTALLATION OF ALL NON-STANDARD ITEMS (IRRIGATION SYSTEMS, DECORATIVE CONCRETE PAVEMENT, BRICK PAVERS, ETC.) WITHIN A PROPOSED/EXISTING STATE MAINTAINED STREET RIGHT-OF-WAY BY A PRIVATE INDIVIDUAL, GROUP, BUSINESS, OR HOMEOWNER'S/BUSINESS ASSOCIATION. AN ENCROACHMENT AGREEMENT MUST BE APPROVED BY NCDOT PRIOR TO THE CONSTRUCTION/INSTALLATION OF THE NON-STANDARD ITEMS. CONTACT NCDOT FOR ADDITIONAL INFORMATION CONCERNING COST, SUBMITTAL AND LIABILITY INSURANCE COVERAGE REQUIREMENTS. IT IS POSSIBLE THAT NCDOT MAY NOT APPROVE ALL ITEMS SOUGHT UNDER AN ENCROACHMENT AGREEMENT.

25. OFFSITE R/W AND/OR CONSTRUCTION EASEMENTS ARE REQUIRED TO BE OBTAINED ACCORDING TO THE GUIDELINES OF THE "OFFSITE R/W ACQUISITION PROCESS". THESE NEEDED R/W AND CONSTRUCTION LIMITS ARE CLEARLY SHOWN ON THE ROADWAY IMPROVEMENT PLAN.

26. TRAFFIC CONTROL DEVICES. IN ACCORDANCE WITH THE HENDERSON COUNTY LAND USE ORDINANCE, TRAFFIC CONTROL DEVICES SUCH AS STOP, YIELD AND SPEED LIMIT SIGNS (BUT NOT INCLUDING ELECTRIC OR ELECTRONIC TRAFFIC SIGNALS) SHALL BE INSTALLED ON PUBLIC STREETS BY THE DEVELOPER AT THE APPROPRIATE LOCATIONS AS DETERMINED BY NCDOT. INSTALLATION STANDARDS AND MATERIALS SHALL BE IN CONFORMANCE WITH NCDOT STANDARDS FOR SUCH DEVICES.

GRADING NOTES:

1. ON-SITE BURIAL PITS REQUIRE AN ONSITE DEMOLITION LANDFILL PERMIT FROM THE ZONING ADMINISTRATOR.

2. ANY GRADING BEYOND THE DENUDED LIMITS SHOWN ON THE PLAN IS A VIOLATION OF THE COUNTY/STATE EROSION CONTROL ORDINANCE AND IS SUBJECT TO FINE.

3. GRADING MORE THAN ONE ACRE WITHOUT AN APPROVED EROSION CONTROL PLAN IS A VIOLATION OF THE NCDENR EROSION CONTROL ORDINANCE AND IS SUBJECT TO A FINE.

4. APPROVAL OF THIS PLAN IS NOT AN AUTHORIZATION TO GRADE ADJACENT PROPERTIES. WHEN FIELD CONDITIONS WARRANT OFF-SITE GRADING, PERMISSION SHALL BE OBTAINED BY CONTRACTOR FROM THE AFFECTED PROPERTY OWNERS.

5. IN ORDER TO ENSURE PROPER DRAINAGE, CONTRACTOR SHALL MAINTAIN A MINIMUM OF 0.5% SLOPE ON THE CURB.

6. THE CONTRACTOR SHALL MAINTAIN EACH STREAM, CREEK, OR BACKWASH CHANNEL IN AN UNOBSTRUCTED STATE AND SHALL REMOVE FROM THE CHANNEL AND BANKS OF THE STREAM ALL DEBRIS, LOGS, TIMBER, TRASH, JUNK AND OTHER ACCUMULATIONS.

7. ANY CONSTRUCTION OR USE WITHIN THE AREAS DELINEATED AS FLOODWAY DISTRICT FRINGE BOUNDARY LINE OR FLOODWAY DISTRICT ENCROACHMENT BOUNDARY LINE IS SUBJECT TO THE RESTRICTIONS IMPOSED BY FLOODWAY REGULATIONS.

8. NON-STANDARD ITEMS (IE: PAVERS, IRRIGATION SYSTEMS, ETC.) IN THE RIGHT-OF-WAY REQUIRE A LOCAL OR STATE ENCROACHMENT AGREEMENT PRIOR TO INSTALLATION.

9. CONTRACTOR SHALL CONTACT INSPECTOR 48 HOURS BEFORE CONSTRUCTION.

10. THE LOCAL ENGINEERING DEPARTMENT HAS NOT REVIEWED AND DOES NOT ASSUME RESPONSIBILITY FOR THE STRUCTURAL STABILITY OF ANY EXISTING OR PROPOSED RETAINING WALLS ON THE SITE. DESIGN OF ALL RETAINING WALLS IS TO BE PER NC BUILDING CODE SECTION 1610.3. DETAILED RETAINING WALL DESIGN DRAWINGS, SEALED BY A NC LICENSED ENGINEER. UPON COMPLETION OF WALL, A NC LICENSED ENGINEER WILL SUBMIT A SEALED LETTER TO MCKIM & CREED THAT RETAINING WALLS WERE CONSTRUCTED PER THE ENGINEERING DRAWINGS.

11. PE SEALED SHOP DRAWINGS FOR RETAINING WALLS MUST BE SUBMITTED TO HENDERSON COUNTY PRIOR TO CONSTRUCTION.

12. ANY BUILDING WITHIN THE 100+1 BUILDING RESTRICTION FLOODLINE IS SUBJECT TO THE RESTRICTIONS OF THE TOWN OF MILLS RIVER UNIFIED DEVELOPMENT ORDINANCE.

STORM DRAINAGE:

1. ALL WORK AND MATERIALS SHALL CONFORM TO THE LATEST EDITION OF THE NCDOT STANDARD SPECIFICATIONS UNLESS OTHERWISE SPECIFIED IN THIS MANUAL.

2. ONLY REINFORCED CONCRETE PIPE IS ALLOWED WITH THE STREET PAVEMENT EXCEPT CULVERTS EQUAL TO OR GREATER THAN (60) SIXTY INCHES IN DIAMETER. FOR CULVERTS EQUAL TO OR GREATER THAN (60) SIXTY INCHES, CORRUGATED STEEL OR ALUMINUM PIPE IS ALLOWED IF IT HAS A CONCRETE POURED INVERT. MINIMUM GAUGE FOR METAL PIPE SHALL BE 14 GAUGE.

3. ALL STORM DRAINAGE PIPE OUTSIDE THE STREET PAVEMENT SHALL BE REINFORCED CONCRETE PIPE, CORRUGATED METAL PIPE OR HIGH DENSITY POLYETHYLENE (HDPE) PIPE. NO OTHER TYPE OF PIPE SHALL BE USED WITHOUT PRIOR APPROVAL FROM THE ENGINEER. ALL PIPES SHALL BE LAID WITH THE BELL OR GROOVE UPGRADE AND THE JOINT ENTIRELY INTERLOCKING.

4. ALL CONCRETE SHALL BE 3600 PSI. IN ORDER TO USE PRE-CAST STORM DRAINAGE STRUCTURES IN ANY STREET RIGHTS-OF-WAY, PRIOR APPROVAL SHALL BE OBTAINED FROM THE ENGINEER.

5. ALL HIGH-DENSITY POLYETHYLENE PIPE SHALL BE CORRUGATED EXTERIOR/SMOOTH INTERIOR, CONFORM TO THE REQUIREMENTS OF AASHTO SPECIFICATION M294 FOR CORRUGATED POLYETHYLENE PIPE AND SHALL REQUIRE COUPLING BANDS AND FITTINGS.

6. CONCRETE PIPE USED WITHIN THE STREET RIGHT-OF-WAY SHALL BE A MINIMUM OF CLASS III REINFORCED CONCRETE PIPE, WITH A MINIMUM DIAMETER OF FIFTEEN (15) INCHES (EIGHTEEN (18) INCHES MINIMUM ON CROSS DRAIN CULVERTS WITHIN THE COUNTY).

7. THE MINIMUM COVER FOR ALL PIPE IS TWO (2) FEET. SPECIAL APPLICATIONS FOR LESS THAN TWO (2) FEET OF COVER WILL BE REVIEWED INDIVIDUALLY.

8. CONCRETE MORTAR JOINTS SHALL BE USED FOR JOINING ALL CONCRETE PIPES. THE PIPE SHALL BE CLEAN AND MOIST WHEN MORTAR IS APPLIED. THE LOWER PORTIONS OF THE BELL OR GROOVE SHALL BE FILLED WITH MORTAR SUFFICIENT TO BRING THE INNER SURFACE FLUSH AND EVEN WHEN THE NEXT JOINT IS FITTED INTO PLACE. THE REMAINDER OF THE JOINT SHALL THEN BE FILLED WITH MORTAR AND A BEAD OR RING OF MORTAR FORMED AROUND THE OUTSIDE OF THE JOINT. THE APPLICATION OF MORTAR MAY BE DELAYED UNTIL FILL IS COMPLETED WHEN THE PIPE IS LARGER THAN THIRTY (30) INCHES.

9. PREFORMED JOINT SEALER, WHICH CONFORMS TO AASHTO SPECIFICATION M-198 FOR TYPE B FLEXIBLE PLASTIC GASKETS, MAY BE USED IN LIEU OF THE MORTAR JOINING METHOD.

10. COUPLING BANDS AND FITTINGS SHALL BE USED FOR JOINING ALL HDPE PIPE. COUPLING BANDS SHALL COVER AT LEAST ONE FULL CORRUGATION ON EACH SECTION OF PIPE. GASKET COUPLING BANDS ARE REQUIRED BETWEEN ALL PIPE JOINTS. THE GASKET SHALL BE MADE OF CLOSED-CELL SYNTHETIC EXPANDED RUBBER MEETING THE REQUIREMENTS OF ASTM D1056, TYPE 2. THE PIPE MANUFACTURER SHALL INSTALL GASKETS ON THE COUPLING BAND. ALL COUPLING BANDS SHALL MEET OR EXCEED THE SOIL-TIGHTNESS REQUIREMENT OF AASHTO STANDARD SPECIFICATION FOR HIGHWAY BRIDGES, SECTION 23, PARAGRAPH 23.1.5.4(E). PIPEFITTINGS SHALL CONFORM TO AASHTO M252 OR AASHTO M294.

11. THE INTERIOR SURFACES OF ALL STORM DRAINAGE STRUCTURES SHALL BE POINTED UP AND SMOOTHED TO AN ACCEPTABLE STANDARD USING MORTAR MIXED TO MANUFACTURER'S SPECIFICATIONS.

12. ALL PIPES IN STORM DRAIN STRUCTURES SHALL BE FLUSH WITH THE INSIDE WALL.

13. ANY STORM DRAIN STRUCTURES OVER THREE (3) FEET AND SIX (6) INCHES IN HEIGHT MUST HAVE STEPS IN ACCORDANCE WITH STANDARD DETAILS SET FORTH IN THESE PLANS.

14. ALL FRAMES, GRATES, RINGS, COVERS, ETC., MUST CONFORM TO THE STANDARDS SET FORTH IN THE NCDOT STANDARDS.

15. ALL GRADED CREEK BANKS AND SLOPES SHALL BE AT A MAXIMUM OF TWO (2) FEET HORIZONTAL TO ONE (1) FOOT VERTICAL (2:1) AND NOT TO EXCEED 10' WITHOUT TERRACING.

16. ALL BACKFILL SHALL BE NON-PLASTIC IN NATURE, FREE FROM ROOTS, VEGETATIVE MATTER, WASTE, CONSTRUCTION MATERIAL OR OTHER OBJECTIONABLE MATERIAL. SAID MATERIAL SHALL BE CAPABLE OF BEING COMPACTED BY MECHANICAL MEANS AND SHALL HAVE NO TENDENCY TO FLOW OR BEHAVE IN A PLASTIC MANNER UNDER THE TAMPING BLOWS OR PROOF ROLLING.

17. MATERIALS DEEMED BY THE ENGINEER AS UNSUITABLE FOR BACKFILL PURPOSES SHALL BE REMOVED AND REPLACED WITH SELECT BACKFILL MATERIAL.

18. BACKFILLING OF TRENCHES SHALL BE ACCOMPLISHED IMMEDIATELY AFTER THE PIPE IS LAID. THE FILL AROUND THE PIPE SHALL BE PLACED IN LAYERS NOT TO EXCEED EIGHT (6) INCHES. EACH LAYER SHALL BE THOROUGHLY COMPACTED TO 95% OF THE MAXIMUM DENSITY OBTAINABLE WITH THE STANDARD PROCTOR TEST (A DENSITY OF 100% STANDARD PROCTOR IS REQUIRED FOR THE TOP EIGHT (8) INCHES).

19. COMPACTION REQUIREMENTS SHALL BE ATTAINED BY THE USE OF MECHANICAL COMPACTION METHODS. EACH LAYER OF BACKFILL SHALL BE PLACED LOOSE AND THOROUGHLY COMPACTED IN PLACE.

20. UNDER NO CIRCUMSTANCES SHALL WATER BE PERMITED TO RISE IN UNBACKFILLED TRENCHES AFTER THE PIPE HAS BEEN PLACED.

21. SUBSURFACE DRAINAGE FACILITIES MAY BE REQUIRED IN THE STREET RIGHT OF WAY IF DEEMED NECESSARY BY THE INSPECTOR.

22. THE PURPOSE OF THE STORM DRAIANGE EASEMENT (SDE) IS TO PROVIDE STORM WATER CONVEYANCE AND ANY STRUCTURES AND/OR OBSTRUCTION TO STORM WATER FLOW IS PROHIBITED.

STAKING AND MATERIALS PLAN NOTES:

1. SEE ARCHITECTURAL PLANS FOR BUILDING DIMENSIONS.

2. ALL DIMENSIONS ARE AT 90 DEGREES UNLESS OTHERWISE NOTED.

3. CONTRACTOR SHALL ESTABLISH AND VERIFY THE POINT OF BEGINNING (P.O.B.) AND STAKE SITE AS INDICATED ON CONSTRUCTION DOCUMENTS PRIOR TO COMMENCEMENT OF CONSTRUCTION. NOTIFY MCKIM & CREED IMMEDIATELY OF ANY DISCREPANCIES.

4. ALL DIMENSIONS ARE TO BACK OF CURB, FACE OF BUILDING, OR CENTERLINE UNLESS OTHERWISE NOTED.

5. ALL DETAILS SHALL BE CONSTRUCTED IN STRICT COMPLIANCE WITH SPECIFICATIONS AND CONSTRUCTION DOCUMENTS.

6. STOP SIGNS SHALL BE STANDARD MUTCD STOP SIGN (R1-1, 24"X24").

STREET/SIDEWALK/DRIVEWAYS:

1. ALL WORK AND MATERIALS SHALL CONFORM TO THE LATEST EDITION OF THE NORTH CAROLINA DEPARTMENT OF TRANSPORTATION (NCDOT) STANDARD SPECIFICATIONS FOR ROADS AND STRUCTURES UNLESS OTHERWISE SPECIFIED.

2. ALL ASPHALT CUTS SHALL BE MADE WITH A SAW WHEN PREPARING STREET SURFACES FOR PATCHING OR WIDENING STRIPS.

3. PAPER JOINTS SHALL BE USED TO SEAL THE ENDS OF AN ASPHALT POUR SO THAT FUTURE EXTENSIONS CAN BE MADE WITHOUT CAUSING ROUGH JOINTS.

4. WHEN PLACING ASPHALT AGAINST EXISTING SURFACES, A STRAIGHT EDGE SHALL BE USED TO PREVENT "HUMPING" AT THAT LOCATION.

5. STONE SHALL BE PRIMED IF PAVING IS NOT COMPLETE WITHIN SEVEN DAYS FOLLOWING STONE BASE APPROVAL.

6. SURFACES SHALL BE TACKED WHEN ASPHALT IS BEING PLACED OVER EXISTING ASPHALT STREETS OR ADJOINING CONCRETE, STORM DRAIN AND SANITARY SEWER STRUCTURES.

7. IN ROLLING AND HILLY TERRAINS, SWEEPING OF THE STONE BASE AND/OR APPLICATION OF A TACK COAT MAY BE REQUIRED NEAR INTERSECTIONS. THESE REQUIREMENTS WILL BE ESTABLISHED BY NCDOT AND ARE BASED ON FIELD CONDITIONS.

8. ALL CONCRETE SHALL HAVE A MINIMUM COMPRESSIVE STRENGTH OF 3600 PSI AT 28 DAYS. THE CONTRACTOR SHALL PREPARE CONCRETE TEST CYLINDERS IN ACCORDANCE WITH SECTION 1000 OF THE NCDOT STANDARD SPECIFICATIONS AT THE DIRECTION OF THE PROJECT INSPECTOR. THE CONTRACTOR SHALL FURNISH ALL EQUIPMENT AND CYLINDER MOLDS. IT SHALL BE THE RESPONSIBILITY OF THE CONTRACTOR TO PROTECT THE CYLINDERS UNTIL SUCH TIME AS THEY ARE TRANSPORTED FOR TESTING. AN INDEPENDENT TESTING LAB SHALL PERFORM TESTING FOR PROJECTS, AT NO COST TO TOWN. THE CONTRACTOR SHALL PROVIDE EQUIPMENT AND PERFORM TESTS ON CONCRETE FOR A MAXIMUM SLUMP AND AIR CONTENT AS DEFINED IN SECTION 1000 OF THE NCDOT STANDARD SPECIFICATIONS. THESE TESTS SHALL BE PERFORMED AT A FREQUENCY ESTABLISHED BY THE INSPECTOR. THE CONTRACTOR SHALL REMOVE MATERIALS FAILING TO MEET SPECIFICATIONS.

9. ALL CONCRETE SHALL BE CURED WITH 100% RESIN BASE, WHITE PIGMENTED CURING COMPOUND WHICH MEETS A.S.T.M. SPECIFICATIONS C-309, TYPE 1, APPLIED AT A UNIFORM RATE AT ONE (1) GALLON TO 400 SQUARE FEET WITHIN 24 HOURS OF PLACEMENT OF THE CONCRETE.

10. ALL CURB AND GUTTER SHALL BE BACKFILLED WITH SOIL APPROVED BY THE INSPECTOR WITHIN 48 HOURS AFTER CONSTRUCTION TO PREVENT EROSION.

11. ALL BACKFILL SHALL BE NON-PLASTIC IN NATURE, FREE FROM ROOTS, VEGETATIVE MATTER, WASTE, CONSTRUCTION MATERIAL OR OTHER OBJECTIONABLE MATERIAL. SAID MATERIAL SHALL BE CAPABLE OF BEING COMPACTED BY MECHANICAL MEANS AND THE MATERIAL SHALL HAVE NO TENDENCY TO FLOW OR BEHAVE IN A PLASTIC MANNER UNDER THE TAMPING BLOWS OR PROOF ROLLING.

12. MATERIALS DEEMED BY THE INSPECTOR AS UNSUITABLE FOR BACKFILL PURPOSES SHALL BE REMOVED AND REPLACED WITH SELECT BACKFILL MATERIAL.

13. ALL TRENCHES IN THE STREET RIGHT-OF-WAY SHALL BE BACKFILLED WITH SUITABLE MATERIAL IMMEDIATELY AFTER THE PIPE IS LAID. THE FILL AROUND ALL PIPE SHALL BE PLACED IN LAYERS NOT TO EXCEED SIX (6) INCHES AND EACH LAYER SHALL BE COMPACTED THOROUGHLY.

14. UNDER NO CIRCUMSTANCES SHALL WATER BE PERMITTED TO RISE IN UNBACKFILLED TRENCHES AFTER THE PIPE HAS BEEN PLACED.

15. COMPACTION REQUIREMENTS SHALL BE ATTAINED BY THE USE OF MECHANICAL COMPACTION METHODS. EACH SIX (6) INCH LAYER OF BACKFILL SHALL BE PLACED LOOSE AND THOROUGHLY COMPACTED INTO PLACE.

16. STRAIGHT FORMS SHALL NOT BE USED FOR FORMING CURB AND GUTTER IN CURVES.

17. ALL EXCESS CONCRETE ON THE FRONT EDGE (LIP) OF GUTTER SHALL BE REMOVED WHEN CURB AND GUTTER IS POURED WITH A MACHINE.

18. ALL SUBGRADE SHALL BE COMPACTED TO 100% OF THE MAXIMUM DENSITY OBTAINABLE WITH THE STANDARD PROCTOR TEST TO A DEPTH OF EIGHT (8) INCHES, AND A DENSITY OF 95 STANDARD PROCTOR FOR DEPTHS GREATER THAN EIGHT (8) INCHES.

19. A CANVAS COVER OR OTHER SUITABLE COVER SHALL BE REQUIRED FOR TRANSPORTING PLANT MIX ASPHALT DURING COOL WEATHER WHEN THE FOLLOWING CONDITIONS ARE PRESENT:
A. AIR TEMPERATURE IS BELOW 60 DEGREES F.
B. LENGTH OF HAUL FROM PLANT TO JOB IS GREATER THAN FIVE (5) MILES.
C. OTHER OCCASIONS AT THE INSPECTOR'S DISCRETION WHEN A COMBINATION OF FACTORS INDICATES THAT MATERIAL SHOULD BE COVERED IN ORDER TO ASSURE PROPER PLACEMENT TEMPERATURE.

20. CONCRETE OR ASPHALT SHALL NOT BE PLACED UNTIL THE AIR TEMPERATURE MEASURED AT THE LOCATION OF THE CONCRETING OPERATION IS AT 35 DEGREES F AND RISING BY 10:00 A.M. CONCRETE OR PAVING OPERATIONS SHOULD BE SUSPENDED WHEN THE AIR TEMPERATURE IS 40 DEGREES F AND DESCENDING. THE CONTRACTOR SHALL PROTECT FRESHLY PLACED CONCRETE IN ACCORDANCE WITH SECTION 420 OF THE NCDOT STANDARD SPECIFICATIONS WHEN THE AIR TEMPERATURE IS AT OR BELOW 35 DEGREES F AND THE CONCRETE HAS NOT OBTAINED AN AGE OF 72 HOURS.

21. THE CONTRACTOR SHALL MAINTAIN TWO-WAY TRAFFIC AT ALL TIMES WHEN WORKING WITHIN EXISTING STREETS. THE CONTRACTOR SHALL PLACE AND MAINTAIN SIGNS, DANGER LIGHTS, BARRICADES, AND FURNISH WATCHMEN OR FLAGMEN TO DIRECT TRAFFIC IN ACCORDANCE WITH THE LATEST EDITION WORK AREA TRAFFIC CONTROL HANDBOOK (WATCH).

22. THE CONTRACTOR SHALL DO THAT WHICH IS NECESSARY TO CONTROL EROSION AND TO PREVENT SEDIMENTATION DAMAGE TO ALL ADJACENT PROPERTIES AND STREAMS IN ACCORDANCE WITH THE APPROPRIATE STATE SEDIMENT AND EROSION CONTROL ORDINANCE.

23. SIGHT TRIANGLES SHOWN ARE THE MINIMUM REQUIRED.

CONSTRUCTION SEQUENCE:

PHASE 1 (PRE-CONSTRUCTION):

1. SET-UP PRE-CONSTRUCTION MEETING ON SITE WITH NCDENR AND HENDERSON COUNTY INSPECTOR.

2. INSTALL CONSTRUCTION ENTRANCE, DIVERSION DITCHES, SILT FENCE, ROCK CHECK DAMS, AND OTHER EROSION CONTROL MEASURES AS REQUIRED TO BEGIN GRADING OPERATIONS. INSTALL ANY ADDITIONAL MEASURES AS DIRECTED BY THE INSPECTOR AT THE PRE-CONSTRUCTION MEETING.

3. INFORM THE INSPECTOR OF THE INSTALLATION OF NECESSARY EROSION CONTROL DEVICES UPON INSTALLATION AND SET-UP AN INSPECTION TO VERIFY COMPLIANCE WITH STANDARDS.

PHASE 2 (GRADING OPERATIONS):

4. BEGIN CLEARING AND GRUBBING THE SITE.

5. BEGIN GRADING OPERATIONS.

6. DILIGENTLY MAINTAIN EROSION CONTROL DEVICES DURING GRADING OPERATIONS.

7. INSTALL SLOPE DRAINGS AND DIVERSION DITCHES ALONG TOPS OF FILL SLOPES.

8. AS THESE AREAS ARE BROUGHT TO GRADE, SLOPE DRAINS AND DIVERSION DITCHES SHOULD BE CONTINUOUSLY MOVED UP THE SLOPE AS FILL INCREASES.

9. AS THESE AREAS ARE BROUGHT TO FINISHED GRADE, THEY SHALL BE SEEDED AND FERTILIZED AS SOON AS POSSIBLE.

PHASE 3 (GRADING OPERATIONS):

10. AFTER GRADING OPERATIONS ARE COMPLETE, CONTACT THE INSPECTOR FOR APPROVAL TO BEGIN STORM DRAINAGE AND UTILITY CONSTRUCTION.

11. UPON INSPECTION AND APPROVAL, BEGIN CONSTRUCTION OF STORM DRAINAGE AND OTHER UTILITIES.

12. INSTALL INLET PROTECTION, ROCK CHECK DAMS AND DIVERSION DITCHES DURING THE CONSTRUCTION OF THE STORM DRAINAGE SYSTEM.

13. DIVERT ALL RUN-OFF OUT OF THE STORM DRAINAGE SYSTEM AND INTO THE APPROPRIATE SEDIMENT BASIN PRIOR TO LEAVING THE DENUDED AREA.

14. COMPLETE STORM DRAINAGE AND UTILITY CONSTRUCTION.

15. STABILIZE THESE AREAS UPON COMPLETION OF INSTALLATION.

PHASE 4 (PROJECT COMPLETION):

16. CONTACT INSPECTOR FOR INSPECTION OF COMPLETED CONSTRUCTION.

17. UPON INSPECTION AND APPROVAL REMOVE ONLY THOSE EROSION CONTROL DEVICES AS INSTRUCTED BY THE INSPECTOR.

18. STABILIZE THE REMAINDER OF THE SITE.

19. REQUEST FINAL INSPECTION FROM THE INSPECTOR.

20. UPON APPROVAL, REMOVE ALL REMAINING EROSION CONTROL DEVICES, SEEDING AS NECESSARY UPON THIS REMOVAL.

EROSION CONTROL NOTES:

1. REFER TO SITE DETAILS SHEET FOR EROSION CONTROL DETAILS AND SPECIFICATIONS.

2. ON-SITE BURIAL PITS REQUIRE AN ON-SITE DEMOLITION LANDFILL PERMIT FROM THE APPROPRIATE REGULATORY AGENCY.

3. ANY GRADING BEYOND THE DENUDED LIMITS SHOWN ON THE PLAN IS A VIOLATION OF THE NCDENR EROSION CONTROL ORDINANCE AND IS SUBJECT TO A FINE.

4. ADDITIONAL MEASURES TO CONTROL EROSION AND SEDIMENT MAY BE REQUIRED BY THE NCDENR EROSION CONTROL INSPECTOR.

5. APPROVAL OF THIS PLAN IS NOT AN AUTHORIZATION TO GRADE ADJACENT PROPERTIES. WHEN FIELD CONDITIONS WARRANT OFF-SITE GRADING, PERMISSION MUST BE OBTAINED FROM THE AFFECTED PROPERTY OWNERS.

6. THE TOTAL SITE ACREAGE IS 12.34 AC. THE TOTAL DENUDED AREA IS 11.60 AC. THE SOIL CLASSIFICATIONS ARE ASHE STONY SANDY LOAM, TATE FINE SANDY LOAM THROUGHOUT THE SITE.

7. CONTRACTOR TO PROVIDE A DOUBLE ROW OF SILT FENCE BETWEEN THE DISTURBED AREA AND ALL CREEKS, WETLANDS, AND LAKES, AS APPLICABLE.

8. ROCK CHECK DAMS TO BE SPACED A MAXIMUM OF 100 FEET ALONG ALL TEMPORARY DIVERSION DITCHES AND PERMANENT DRAINAGE SWALES IN ORDER TO MAINTAIN A NON-EROSIVE VELOCITY OF LESS THAN 5FT/SEC FOR THE 10-YEAR STORM EVENT.

9. NO WORK IS TO TAKE PLACE IN, OR ADJACENT TO ANY WETLAND AND/OR STREAM IMPACTS UNTIL APPROVAL HAS BEEN GRANTED BY THE USACE AND NCDENR.

10. IF NECESSARY, SLOPES THAT EXCEED (8) VERTICAL FEET SHOULD BE STABILIZED WITH SYNTHETIC OR VEGETATIVE MATS, IN ADDITION TO HYDROSEEDING. IT MAY BE NECESSARY TO INSTALL TEMPORARY SLOPE DRAINS DURING CONSTRUCTON. TEMPORARY BERMS MAY BE NEEDED UNTIL THE SLOPE IS BROUGHT TO GRADE.

11. STABILIZATION MEASURES SHALL BE INITIATED AS SOON AS PRACTICAL IN PORTIONS OF THE SITE WHERE CONSTRUCTION ACTIVITIES HAVE TEMPORARILY OR PERMANENTLY CEASED, BUT IN NO CASE MORE THAN FOURTEEN (14) DAYS AFTER WORK HAS CEASED, UNLESS ACTIVITY IN THAT PORTION OF THE SITE WILL RESUME IWTHIN TWENTY ONE (21) DAYS.

12. ALL SEDIMENT AND EROSION CONTROL DEVICES SHALL BE INSPECTED EVERY SEVEN (7) DAYS OR AFTER EACH RAINFALL OCCURENCE THAT EXCEEDS ONE-HALF (1/2) INCH. DAMAGED OR INEFFECTIVE DEVICES SHALL BE REPAIRED OR REPLACED, AS NECESSARY.

13. PROVIDE SILT FENCE AND/OR OTHER CONTROL DEVICES, AS MY BE REQUIRED TO CONTROL SOIL EROSION DURING UTILITY CONSTRUCTION. ALL DISTURBED AREAS SHALL BE CLEANED, GRADED, AND STABILIZED WITH GRASSING IMMEDIATELY AFTER THE UTILITY INSTALLATION.

14. ALL EROSION CONTROL DEVICES SHALL BE PROPERLY MAINTAINED DURING ALL PHASES OF CONSTRUCTION UNTIL THE COMPLETION OF ALL CONSTRUCTION ACTIVITIES AND ALL DISTURBED AREAS HAVE BEEN STABILIZED. ADDITIONAL EROSION CONTROL DEVICES MAY BE REQUIRED DURING CONSTRUCTION IN ORDER TO CONTROL EROSION AND/OR OFFSITE SEDIMENTATION. ALL TEMPORARY EROSION CONTROL DEVICES SHALL BE REMOVED ONCE CONSTRUCTION IS COMPLETE AND THE SITE IS STABILIZED.

15. THE CONTRACTOR MUST TAKE NECESSARY ACTION TO MINIMIZE THE TRACKING OF MUD ONTO EXISTING PAVED ROADWAY AREAS DURING CONSTRUCTION ACTIVITIES. THE CONTRACTOR SHALL REMOVE ON A DAILY BASIS MUD/SOIL FROM PAVEMENT, AS MAY BE REQUIRED.

16. TEMPORARY DIVERSION BERMS AND/OR DITCHES WILL BE PROVIDED AS NEEDED DURING CONSTRUCTION TO PROTECT WORK AREAS FROM UPSLOPE RUN-OFF AND/OR DIVERT SEDIMENT LADEN WATER TO APPROPRIATE TRAPS OR STABLE OUTLETS.

SEEDING SPECIFICATIONS:

3:1 SLOPES OR FLATTER:
1. APPLY AGRICULTURAL LIME AT THE RATE OF 90 lbs/1000 SF.
2. APPLY 10-10-10 COMMERCIAL FERTILIZER AT THE RATE OF 20 lbs/1000 SF.
3. SEED IN ACCORDANCE TO THE FOLLOWING SCHEDULE AND APPLICATION RATES:

DATE:	TYPE:	PLANTING RATE:
AUG 15 – NOV 1	TALL FESCUE	300 lbs/ac OR 7 lbs/1000 SF
NOV 1 – MAR 1*	TALL FESCUE AND	300 lbs/ac OR 7 lbs/1000 SF
	ABRUZZI RYE	25 lbs/ac OR 1/2 lb/1000 SF
MAR 1 – APR 15	TALL FESCUE	300 lbs/ac OR 7 lbs/1000 SF
APR 15 – JUL 30	MULLED COMMON	
	BERMUDA GRASS	30 lbs/ac OR 1/2 lb/1000 SF
JUL 15 – AUG 15	TALL FESCUE AND	300 lbs/ac OR 7 lbs/1000 SF
	BROWN TOP MILLET	35 lbs/ac OR 3/4 lb/1000 SF
	OR SORGHUM SUDAN HYBRIDS	30 lbs/ac OR 3/4 lb/1000 SF

4. MULCH WITH STRAW APPLIED AT THE RATE OF 75-100 lbs/1000 SF.
* HEAVILY MULCHED DURING JANUARY TO MARCH PERIOD.

SLOPES GREATER THAN 3:1 TO 2:1 SLOPES:
1. APPLY AGRICULTURAL LIME AT THE RATE OF 90 lbs/1000 SF.
2. APPLY 10-10-10 COMMERCIAL FERTILIZER AT THE RATE OF 20 lbs/1000 SF.
3. SEED IN ACCORDANCE TO THE FOLLOWING SCHEDULE AND APPLICATION RATES:

DATE:	TYPE:	PLANTING RATE:
MAR – JUN 1	SERICEA LESPEDEZA	50 lbs/ac OR 1 1/2 lbs/1000 SF
	(SCARIFIED) AND	
MAR – APR 1	ADD TALL FESCUE	150 lbs/ac OR 3 1/2 lbs/1000 SF
	OR	
MAR – JUN	ADD WEEPING LOVEGRASS	5 lbs/ac OR 1/8 lb/1000 SF
JUN – SEPT 1***	TALL FESCUE AND	60 lbs/ac OR 1 1/2 lbs/1000 SF
	BROWN TOP MILLET	35 lbs/ac OR 3/4 lb/1000 SF
	OR SORGHUM SUDAN HYBRIDS	30 lbs/ac OR 3/4 lb/1000 SF
SEP – MAR 1	SERICEA LESPEDEZA	70 lbs/ac OR 1 3/4 lbs/1000 SF
	(UNHULLED – UNSCARIFIED)	
	TALL FESCUE	150 lbs/ac OR 3 1/2 lbs/1000 SF
	MILLET OR SUDAN	20 lbs/ac OR 1/2 lb/1000 SF

4. MULCH WITH 6" STRAW APPLIED AT THE RATE OF 60-70 lbs/1000 SF AND ANCHOR WITH ASPHALT EMULSION TACK COAT APPLIED AT THE RATE OF 14-28 GAL/1000 SF OR 800-1200 GAL/ac.
*** TEMPORARY RESEED SEPT. 1 AT RECOMMENDED RATES.

SEEDBED PREPARATION NOTES:

1. SURFACE WATER CONTROL MEASURES TO BE INSTALLED ACCORDING TO PLAN.

2. AREAS TO BE SEEDED SHALL BE RIPPED AND SPREAD WITH AVAILABLE TOPSOIL 3" DEEP. TOTAL SEEDBED PREPRED DEPTH SHALL BE 4" TO 6" DEEP.

3. LOOSE ROCKS AND OTHER OBSTRUCTIONS SHALL BE REMOVED FROM THE SURFACE SO THAT THEY WILL NOT INTERFERE WITH THE ESTABLISHMENT AND MAINTENANCE OF VEGETATION. SURFACE FOR FINAL SEEDBED PREPARATION, AT FINISH GRADES SHOWN, SHALL BE REASONABLY SMOOTH AND UNIFORM.

4. IF NO SOIL TEST IS TAKEN, FERTILIZER AND LIME TO BE ACCORDING TO SEEDING SPECIFICATIONS LISTED HERE. IN ADDITION, PROVIDE 15 lbs/1000SF OF SUPERPHOSOPHATE.

5. IF SOIL TEST IS TAKEN, PROVIDE LIME AND FERTILIZER ACCORDING TO THE SOIL TEST REPORT.

6. LIME AND FERTILIZER SHALL BE APPLIED UNIFORMILY AND MIXED WITH THE SOIL DURING SEEDBED PREPARATION.

7. ADDITIONAL EROSION CONTROL MEASURES MAY BE REQUIRED DEPENDING ON FIELD CONDITIONS.

8. MULCH TO BE TACKED OR MECHANICALLY TIED DOWN WITHIN TWO DAYS AFTER THE MULCH IS SPREAD.

9. ALL SLOPES GREATER THAN 3:1 SHALL BE STABILIZED WITH JUTE MESH.

MOSELEYARCHITECTS
A PROFESSIONAL CORPORATION
11430 NORTH COMMUNITY HOUSE ROAD, GIBSON BUILDING SUITE 225, CHARLOTTE, NC 28277
PHONE (704) 540-3755 FAX (704) 540-3754
MOSELEYARCHITECTS.COM

NORTH CAROLINA PROFESSIONAL ENGINEER SEAL 27528 BRIAN J. DEY 12/11/07

HILLANDALE ELEMENTARY SCHOOL
GENERAL NOTES
HENDERSON COUNTY PUBLIC SCHOOLS
HENDERSON COUNTY, NORTH CAROLINA

PROJECT NO: MOSELEY M&C-4099-0006
DATE: 12/10/07
REVISIONS: .
DRAWN BY: -

C7.3